Geko Fluid Control GmbH

Geko Union/Geko Fluid Control GmbH
Add：Schwalbenstr.28/2 70794 Filderstadt Germany
Tel：+49（0）711-21570744
Fax: +49（0）711-21570744
Web:www.geko-union.com
E-mail:info@geko-union.com

Ball valve Cryogenic Valve High Purity Clean Ball Valve

+ For more details, please visit the GEKO website or call our company

May.2013.3000

GEKO CONTROL-VALVES

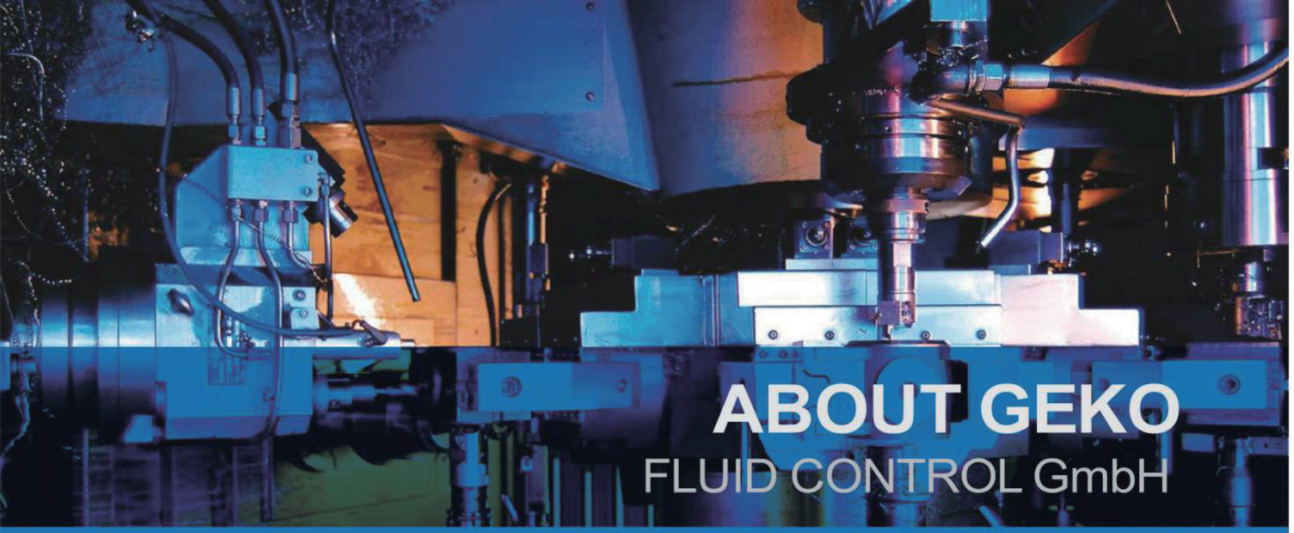

ABOUT GEKO
FLUID CONTROL GmbH

Experience, Responsibility and Innovation Technology

Premier Manufacturer of Flow Control & Automation Products

GEKO Valves & Controls, born in Germany, is a well-known professional manufacturer of pneumatic & electric control valve and actuators. Building upon professional production capability for more than 60 years and extensive field experience,with sophisticated and most advanced fabrication process which can provide an excellent basis on optimum solutions to any specific requirements by the user. we offer industrial ball valves, gate valves, globe valves, butterfly valves, check valves. Serve industries like Chemical, Oil & Gas, Refining, Pulp & Paper, Mining & Minerals, Power Generation Industries, etc. We have become one of the pioneers of global manufacturers of flow control valve.

Valve and actuator units supplied by Geko Valves&Controls are of superior quality and come up higher standard. They improve both performance and safety of your installation, besides, they reduce pollution to the environment and mankind.

We are a global enterprise, have plants in Germany,Netherland,Korea,China mainland as well as China Taiwan .

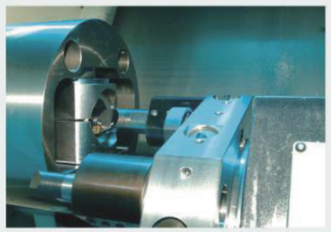

GEKO CONTROL-VALVES

GKV-243
3-WAY/4-WAY MOUNTING TYPE FLANGE END BALL VALVE

- L-PORT&T-PORT&X-PORT
- BLOW-OUT PROOF STEM/ FULL PORT
- ISO 5211 DIRECT MOUNTING PAD
- TEMPERATURE RANGE: -20 to 180℃

GKV-243 PN16/40

- FLANGE DIMENSIONS: EN 1092-1 TYPE 21 PN16/40(RF SF)
- TEST: EN-12266-1

GKV-243 CLASS 150#

- FLANGE DIMENSIONS: ASME B16.5 CLASS150
- TEST: API-598

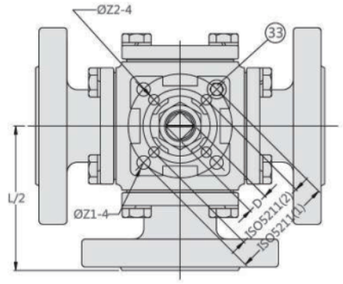

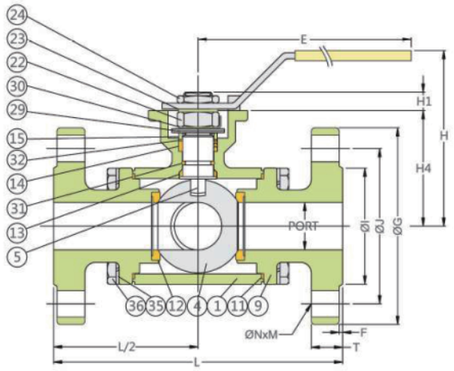

MATERIALS LIST

NO.	PART NAME	MATERIAL	Q'TY
1	BODY	CF8M	1
4	BALL	CF8M	1
5	STEM	SS316	1
9	END CAP	CF8M	4
11	BODY SEAL	PTFE.	4
12	SEAT	PTFE.	4
13	THRUST WASHER	PTFE.	1
14	STEM PACKING	PTFE.	1set
15	GLAND	SS304	1
19	HANDLE	SS304	1
21	HANDLE COVER	PLASTIC	1
22	STEM NUT	SS304	1
23	HANDLE WASHER	SS304	1
24	HANDLE NUT	SS304	1
29	BELLEVILLE WASHER	SS410	2
30	STOP WASHER	SS304	1
31	O-RING	VITON	1
32	PACKING FOLLOWER	PTFE.+25GF	1
33	STOP PIN	SS304	1set
35	BOLT	SS304	16
36	BOLT WASHER	SS304	16

1/2"~3" CLASS150 DIMENSIONS

unit:mm

SIZE	PORT	L	E	H1	H	H4	D	G	J	I	T	F	M	N	Z1	Z2	ISO 5211	
1/2"	16.0	147.4	186.5	9.0	89.0	47.8	9.0	89.0	60.5	35.0	11.2	1.60	4	16	6.0			F04
3/4"	20.0	155.8	218.0	11.0	98.0	58.2	9.0	98.6	70.0	43.0	12.7	1.60	4	16	7.0			F05
1"	25.0	168.8	218.0	11.5	102.0	64.0	9.0	108.0	79.2	51.0	14.3	1.60	4	16	7.0			F05
1-1/4"	32.0	197.9	235.0	15.2	118.5	79.0	14.0	117.5	88.9	63.5	15.9	1.60	4	16	9.0	7.0	F05	F07
1-1/2"	38.0	221.4	235.0	14.3	127.0	88.5	14.0	127.0	98.6	73.2	17.5	1.60	4	16	9.0	7.0	F05	F07
2"	50.0	244.6	252.0	17.8	139.0	105.8	17.0	152.5	120.7	92.0	19.1	1.60	4	19	11.0	9.0	F07	F10
2-1/2"	65.0	270.0	252.0	17.5	165.7	117.3	17.0	177.8	139.7	104.7	23.3	1.60	4	19	11.0	9.0	F07	F10
3"	80.0	292.2	252.0	17.5	170.0	128.0	17.0	190.5	152.4	127.0	23.9	1.60	4	19	11.0	9.0	F07	F10

DN15~DN80 PN 16 DIMENSIONS

SIZE	PORT	L	E	H1	H	H4	D	G	J	I	T	F	M	N	Z1	Z1	ISO 5211	
DN15	16.0	158.0	186.5	9.0	89.0	47.8	9.0	95.0	65.0	45.0	16.0	2.0	4	14	6.0			F04
DN20	20.0	169.0	218.0	11.5	98.0	58.2	9.0	105.0	75.0	58.0	18.0	2.0	4	14	7.0			F50
DN25	25.0	185.0	218.0	11.5	102.0	64.0	9.0	115.0	85.0	68.0	18.0	2.0	4	14	7.0			F05
DN32	32.0	195.0	235.0	15.2	118.5	79.0	14.0	140.0	100.0	78.0	18.0	2.0	4	18	9.0	7.0	F05	F07
DN40	38.0	232.0	235.0	14.3	127.0	88.5	14.0	150.0	110.0	88.0	18.0	2.0	4	18	9.0	7.0	F05	F07
DN50	50.0	253.0	252.0	17.8	139.0	105.8	17.0	165.0	125.0	102.0	20.0	2.0	4	18	11.0	9.0	F07	F10
DN65	65.0	270.0	252.0	17.5	165.7	117.3	17.0	185.0	145.0	122.0	18.0	2.0	4	18	11.0	9.0	F07	F10
DN80	76.0	292.2	252.0	17.5	170.0	128.0	17.0	200.0	160.0	138.0	20.0	2.0	8	18	11.0	9.0	F07	F10

GKV-243

3-WAY/4-WAY ISO 5211MOUNTING FLANGE END BALL VALVE

DN100~DN150(4"~6") 3-WAY/4-WAY

GKV-243 PN16/40

- L-PORT&T-PORT&X-PORT
- BLOW-OUT PROOF STEM/ FULL PORT
- TEMPERATURE RANGE: -20 to 180℃
- FLANGE DIMENSIONS:
  EN 1092-1 TYPE 21 PN16/40(RF SF)
- TEST: EN-12266-1

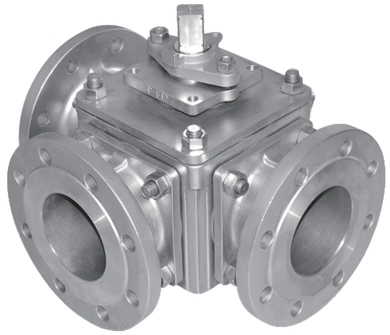

GKV-243 CLASS 150#

- L-PORT&T-PORT&X-PORT
- BLOW-OUT PROOF STEM/ FULL PORT
- TEMPERATURE RANGE: -20 to 180℃
- FLANGE DIMENSIONS: ASME B16.5 CLASS150
- TEST: API-598

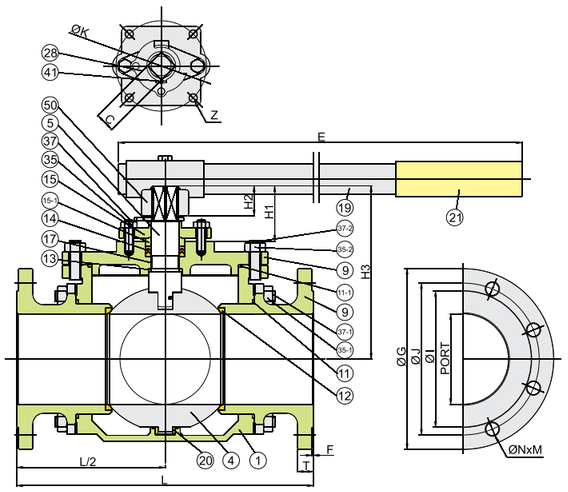

MATERIALS LIST

NO.	PART NAME	MATERIAL	Q`TY
1	BODY	ASTM A351 Gr.CF8M	1
4	BALL	ASTM A351 Gr.CF8M	1
5	STEM	SS316	1
9	END CAP	ASTM A351 Gr.CF8M	4
11	BODY SEAL	PTFE	4
11-1	TOP SEAL	PTFE	1
12	SEAT	RTFE	4
13	THRUST WASHER	PTFE	1
14	STEM PACKING	PTFE	1 set
15	GLAND	ASTM A351 Gr.CF8	1
15-1	GLAND BUSH	SS304	1
17	STEM BUSHING	PTFE	1
19	HANDLE	LRON	1
20	BUSHING	PTFE	1
21	HANDLE COVER	PLASTIC	1
28	STOP PLATE	SS304	1
35	BODY BOLT	SS304	2
35-1	BODY BOLT	SS304	16and24
35-2	BODY BOLT	SS304	4and6
37	BOLT NUT	SS304	2
37-1	BOLT NUT	SS304	16and24
37-2	BOLT NUT	SS304	4and6
41	SNAP RING	SS304	2
50	HANDLE ADAPTER	SS304	1

4"~6" Class 150

unit:mm

SIZE	PORT	L	E	H1	H2	H3	C	ØG	ØJ	ØI	T	F	M	ØN	ØK	Z
4"	100	368.0	600	70.0	33.0	193.0	27.0	228.6	190.5	157.2	23.9	1.6	8	19.0	125	M12X1.75P
5"	125	420.0	600	70.0	33.0	233.0	27.0	254.0	216.0	186.0	24.0	1.6	8	22.3	125	M12X1.75P
6"	150	479.4	800	77.5	43.5	266.0	36.0	279.4	241.3	216.0	25.4	1.6	8	22.3	140	M16X2.0P

DN100~DN150 PN16

unit:mm

SIZE	PORT	L	E	H1	H2	H3	C	ØG	ØJ	ØI	T	F	M	ØN	ØK	Z
DN100	100	360	600	70.0	33.0	193.0	27.0	220.0	180.0	158.0	20.0	2.0	8	18	125	M12X1.75P
DN125	125	416	600	70.0	33.0	233.0	27.0	250.0	210.0	188.0	22.0	2.0	8	18	125	M12X1.75P
DN150	150	473	800	77.5	43.5	266.0	36.0	285.0	240.0	212.0	22.0	2.0	8	22	140	M16X2.0P

DN100~DN150 PN40

unit:mm

SIZE	PORT	L	E	H1	H2	H3	C	ØG	ØJ	ØI	T	F	M	ØN	ØK	Z
DN100	100	360	600	70.0	33.0	193.0	27.0	235.0	190.0	158.0	24.0	2.0	8	22	125	M12X1.75P
DN125	125	424	600	70.0	33.0	233.0	27.0	270.0	220.0	188.0	26.0	2.0	8	26	125	M12X1.75P
DN150	150	493	800	77.5	43.5	266.0	36.0	300.0	250.0	218.0	28.0	2.0	8	26	140	M16X2.0P

GKV-243

3-WAY/4-WAY FULL BORE FLANGE END BALL VALVE

4"~6"(DN100,DN125,DN150)
PN16/PN40, Class150
T-PORT,L-PORT,X-PORT

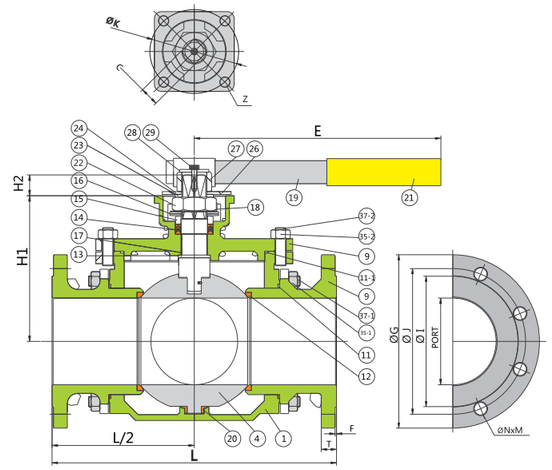

MATERIALS LIST

NO.	PART NAME	MATERIAL	Q`TY
1	BODY	CF8M/CF8/WCB	1
4	BALL	CF8M/CF8	1
5	STEM	SS316/304	1
9	END CAP	CF8M/CF8/WCB	4
11	BODY SEAL	PTFE	4
11-1	TOP SEAL	PTFE	1
12	SEAT	PTFE	4
13	THRUST WASHER	PTFE	1
14	STEM PACKING	PTFE	1 SET
15	GLAND	SS304	1
16	BELLEVILLE WASHER	SS304	2
17	STEM BUSHING	PTFE	1
18	TAB WASHER	SS304	1
19	HANDLE	IRON TUBE	1
20	BUSHING	RTFE	1
21	HANDLE COVER	PLASTIC	1
22	STEM NUT	SS304	1
23	WASHER	SS304	1
24	TRIANGLE STOPPER	SS304	1
28	HANDLE WASHER	SS304	1
29	HANDLE BOLT	SS304	1
35-1	BODY BOLT	SS304	24
35-2	BOLT NUT	SS304	6
37-1	BOLT NUT	SS304	24
37-2	BOLT NUT	SS304	6

DN100~DN150 PN16

unit:mm

SIZE	PORT	L	E	H1	H2	C	ØG	ØJ	ØI	T	F	M	ØN	ØK	Z
DN100	100.0	360.0	600.0	159.0	30.0	27.0	220.0	180.0	158.0	20.0	2.0	8.0	18.0	125.0	14.0
DN125	125.0	410.0	600.0	210.0	30.0	27.0	250.0	210.0	188.0	22.0	2.0	8.0	18.0	125.0	14.0
DN150	150.0	467.0	800.0	239.0	36.0	36.0	285.0	240.0	212.0	22.0	2.0	8.0	22.0	140.0	17.5

DN100~DN150 PN40

SIZE	PORT	L	E	H1	H2	C	ØG	ØJ	ØI	T	F	M	ØN	ØK	Z
DN100	100.0	360.0	600.0	159.0	30.0	27.0	235.0	190.0	158.0	24.0	2.0	8.0	22.0	125.0	14.0
DN125	125.0	410.0	600.0	210.0	30.0	27.0	270.0	220.0	188.0	26.0	2.0	8.0	26.0	125.0	14.0
DN150	150.0	467.0	800.0	239.0	36.0	36.0	300.0	250.0	212.0	28.0	2.0	8.0	26.0	140.0	17.5

4"~6" CLASS 150

SIZE	PORT	L	E	H1	H2	C	ØG	ØJ	ØI	T	F	M	ØN	ØK	Z
4"	100.0	368.0	600.0	159.0	30.0	27.0	228.6	190.5	157.2	23.9	1.6	8.0	19.0	125.0	14.0
5"	125.0	420.0	600.0	210.0	30.0	27.0	254.0	216.0	186.0	24.0	1.6	8.0	22.3	125.0	14.0
6"	150.0	479.4	800.0	239.0	36.0	36.0	279.4	241.3	216.0	25.4	1.6	8.0	22.3	140.0	17.5

GKV-225 PN16/40

- BLOW-OUT PROOF STEM/ FULL PORT
- ISO 5211 DIRECT MOUNTING PAD
- TEMPERATURE RANGE: -20 to 180℃
- DESIGN:EN12516-1
- FLANGE DIMENSIONS: EN 1092-1 TYPE 21 PN16/40(RF SF)
- FACE TO FACE:EN 558-1 F4/F5(DIN 3202 F4/F5)
- TEST: EN-12266-1

GKV-225 CLASS 150# 300#

- BLOW-OUT PROOF STEM/ FULL PORT
- ISO 5211 DIRECT MOUNTING PAD
- TEMPERATURE RANGE: -20 to 180℃
- DESIGN:ANSI B16.34
- FLANGE DIMENSIONS: ASME B16.5 CLASS150
- FACE TO FACE: ASME B16.1
- TEST: API-598

Pressure test:API 598

GKV-225 JIS-10K

- BLOW-OUT PROOF STEM/ FULL PORT
- ISO 5211 DIRECT MOUNTING PAD
- TEMPERATURE RANGE: -20 to 180℃
- DESIGN:ANSI B16.34
- FLANGE DIMENSIONS: JIS B2238 10K
- FACE TO FACE: JIS B2002 (ASME B16.1)
- TEST: API-598

GKV-225 GB-PN16/40

- BLOW-OUT PROOF STEM/ FULL PORT
- ISO 5211 DIRECT MOUNTING PAD
- TEMPERATURE RANGE: -20 to 180℃
- DESIGN:GB/T-12237
- FLANGE DIMENSIONS: GB/T-9113.1
- FACE TO FACE:GB/T-12221
- TEST:GB/T-13927

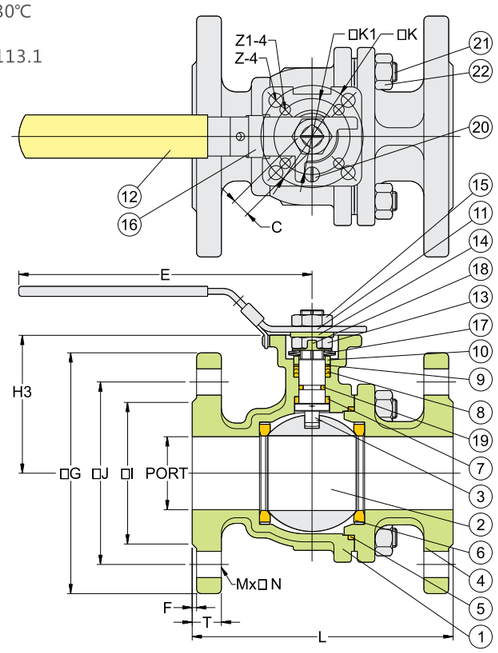

GEKO CONTROL-VALVES
GKV-225
FULL PORT TWO-PIECE DIRECT MOUNTING PAD BALL VALVE FLANGE END

DIMENSIONS

GKV-225 DN15-DN50 PN50 PN16/40, DN65-DN100 PN16

unit:mm

SIZE		PORT	L	E	H2	H3	C	ØG	ØJ	ØI	T	F	M	ØN	ØK	ØK1	Z-4	Z1-4
DN15	1/2"	15.0	115.0	112	8.5	48	9.0	95.0	65.0	45.0	16.0	2.0	4	14.0	50.0	36.0	7.0	6.0
DN20	3/4"	20.0	120.0	112	8.5	62	9.0	105.0	75.0	58.0	18.0	2.0	4	14.0	50.0	36.0	7.0	6.0
DN25	1"	25.0	125.0	136	11.4	64	9.0	115.0	85.0	68.0	18.0	2.0	4	14.0	50.0	36.0	7.0	6.0
DN32	1-1/4"	32.0	130.0	185	11.4	71	9.0	140.0	100.0	78.0	18.0	2.0	4	18.0	50.0	36.0	7.0	6.0
DN40	1-1/2"	38.0	140.0	198	14.0	76	14.0	150.0	110.0	88.0	18.0	2.0	4	18.0	70.0	50.0	9.0	7.0
DN50	2"	50.0	150.0	198	13.7	84.5	14.0	165.0	125.0	102.0	20.0	2.0	4	18.0	70.0	50.0	9.0	7.0
DN65	2-1/2"	64.0	170.0	265	18.0	106.8	17.0	185.0	145.0	122.0	18.0	2.0	4	18.0	102.0	70.0	11.0	9.0
DN80	3"	76.0	180.0	265	18.0	116.0	17.0	200.0	160.0	138.0	20.0	2.0	8	18.0	102.0	70.0	11.0	9.0
DN100	4"	100.0	190.0	325	18.0	154.5	17.0	220.0	180.0	158.0	20.0	2.0	8	18.0	102.0	70.0	11.0	9.0

GKV-225 DN65-DN100 PN40

SIZE		PORT	L	E	H2	H3	C	ØG	ØJ	ØI	T	F	M	ØN	ØK	ØK1	Z-4	Z1-4
DN65	2-1/2"	64.0	170.0	265	18.0	106.8	17.0	185.0	145.0	122.0	22.0	2.0	8	18.0	102.0	70.0	11.0	9.0
DN80	3"	76.0	180.0	265	18.0	116.0	17.0	200.0	160.0	138.0	24.0	2.0	8	18.0	102.0	70.0	11.0	9.0
DN100	4"	100.0	190.0	325	18.0	154.5	17.0	235.0	190.0	158.0	24.0	2.0	8	22.0	102.0	70.0	11.0	9.0

GKV-225 1/2"~4"Class150

SIZE		PORT	L	E	H2	H3	C	ØG	ØJ	ØI	T	F	M	ØN	ØK		ØK1		Z-4	Z1-4
DN15	1/2"	15.0	108.0	112	8.5	48	9.0	89.0	60.5	35.0	11.2	1.6	4	16.0	50	F05	36	F03	7.0	6.0
DN20	3/4"	20.0	117.0	112	8.5	62	9.0	98.6	70.0	43.0	12.7	1.6	4	16.0	50	F05	36	F03	7.0	6.0
DN25	1"	25.0	127.0	136	11.4	64	9.0	108.0	79.2	51.0	14.3	1.6	4	16.0	50	F05	36	F03	7.0	6.0
DN32	1-1/4"	32.0	140.0	185	11.4	71	9.0	117.5	88.9	63.5	15.9	1.6	4	16.0	50	F05	36	F03	7.0	6.0
DN40	1-1/2"	38.0	165.0	198	14.0	76	14.0	127.0	98.6	73.2	17.5	1.6	4	16.0	70	F07	50	F05	9.0	7.0
DN50	2"	50.0	178.0	198	13.7	84.5	14.0	152.5	120.7	92.0	19.1	1.6	4	19.0	70	F07	50	F05	9.0	7.0
DN65	2-1/2"	64.0	190.0	265	18.0	106.8	17.0	177.8	139.7	104.7	23.3	1.6	4	19.0	102	F10	70	F07	11.0	9.0
DN80	3"	76.0	203.0	265	18.0	116.0	17.0	190.5	152.4	127.0	23.9	1.6	4	19.0	102	F10	70	F07	11.0	9.0
DN100	4"	100.0	229.0	325	18.0	154.5	17.0	228.6	190.5	157.2	23.9	1.6	8	19.0	102	F10	70	F07	11.0	9.0

GKV-225 1/2"~4"Class300

SIZE		PORT	L	E	H2	H3	C	ØG	ØJ	ØI	T	F	M	ØN	ØK		ØK1		Z-4	Z1-4
DN15	1/2"	15.0	140.0	112	8.5	48	9.0	95.3	66.5	35.0	14.3	1.6	4	16.0	50	F05	36	F03	7.0	6.0
DN20	3/4"	20.0	152.0	112	8.5	62	9.0	117.4	82.6	43.0	15.9	1.6	4	19.1	50	F05	36	F03	7.0	6.0
DN25	1"	25.0	165.0	136	11.4	64	9.0	124.0	88.9	51.0	17.5	1.6	4	19.1	50	F05	36	F03	7.0	6.0
DN32	1-1/4"	32.0	178.0	185	11.4	71	9.0	133.4	98.6	63.5	19.1	1.6	4	19.1	50	F05	36	F03	7.0	6.0
DN40	1-1/2"	38.0	190.0	198	14.0	76	14.0	155.5	114.3	73.2	20.6	1.6	4	22.3	70	F07	50	F05	9.0	7.0
DN50	2"	50.0	216.0	198	13.7	84.5	14.0	165.1	127.0	92.0	22.4	1.6	8	19.1	70	F07	50	F05	9.0	7.0
DN65	2-1/2"	64.0	241.0	265	18.0	106.8	17.0	190.5	149.4	104.7	25.4	1.6	8	22.3	102	F10	70	F07	11.0	9.0
DN80	3"	76.0	283.0	265	18.0	116.0	17.0	209.6	168.1	127.0	28.6	1.6	8	22.3	102	F10	70	F07	11.0	9.0
DN100	4"	100.0	305.0	325	18.0	154.5	17.0	254.0	200.2	157.2	31.8	1.6	8	22.3	102	F10	70	F07	11.0	9.0

GKV-225 10K 15A-100A

SIZE	PORT	L	E	H2	H3	C	ØG	ØJ	ØI	T	F	M	ØN	ØK	ØK1	Z-4	Z1-4
15A	15.0	108.0	112	8.5	48	9.0	95.0	70.0	51.0	12.0	1.0	4	15.0	50.0	36.0	7.0	6.0
20A	20.0	117.0	112	8.5	62	9.0	100.0	75.0	56.0	14.0	1.0	4	15.0	50.0	36.0	7.0	6.0
25A	25.0	127.0	136	11.4	64	9.0	125.0	90.0	67.0	14.0	1.0	4	19.0	50.0	36.0	7.0	6.0
32A	32.0	140.0	185	11.4	71	9.0	135.0	100.0	76.0	16.0	2.0	4	19.0	50.0	36.0	7.0	6.0
40A	38.0	165.0	198	14.0	76	14.0	140.0	105.0	81.0	16.0	2.0	4	19.0	70.0	50.0	9.0	7.0
50A	50.0	178.0	198	13.7	84.5	14.0	15 5.0	120.0	96.0	16.0	2.0	4	19.0	70.0	50.0	9.0	7.0
65A	64.0	190.0	265	18.0	106.8	17.0	17 5.0	140.0	116.0	18.0	2.0	4	19.0	102.0	70.0	11.0	9.0
80A	76.0	203.0	265	18.0	116.0	17.0	185.0	150.0	126.0	18.0	2.0	8	19.0	102.0	70.0	11.0	9.0
100A	100.0	229.0	325	18.0	154.5	17.0	210.0	175.0	151.0	18.0	2.0	8	19.0	102.0	70.0	11.0	9.0

GKV-225 GB DN15-DN50 PN16/40, DN65-DN100 PN16

SIZE		PORT	L	E	H2	H3	C	ØG	ØJ	ØI	T	F	M	ØN	ØK	ØK1	Z-4	Z1-4
DN15	1/2"	15.0	130.0	112	8.5	48	9.0	95.0	65.0	46.0	14.0	2.0	4	14.0	50.0	36.0	7.0	6.0
DN20	3/4"	20.0	130.0	112	8.5	62	9.0	105.0	75.0	56.0	16.0	2.0	4	14.0	50.0	36.0	7.0	6.0
DN25	1"	25.0	140.0	136	11.4	64	9.0	115.0	85.0	65.0	16.0	2.0	4	14.0	50.0	36.0	7.0	6.0
DN32	1-1/4"	32.0	165.0	185	11.4	71	9.0	140.0	100.0	78.0	18.0	2.0	4	18.0	50.0	36.0	7.0	6.0
DN40	1-1/2"	38.0	165.0	198	14.0	76	14.0	150.0	110.0	84.0	20.0	2.0	4	18.0	70.0	50.0	9.0	7.0
DN50	2"	50.0	203.0	198	13.7	84.5	14.0	165.0	125.0	99.0	20.0	2.0	4	18.0	70.0	50.0	9.0	7.0
DN65	2-1/2"	64.0	222.0	265	18.0	106.8	17.0	185.0	145.0	118.0	20.0	2.0	4	18.0	102.0	70.0	11.0	9.0
DN80	3"	76.0	241.0	265	18.0	116.0	17.0	200.0	160.0	132.0	20.0	2.0	8	18.0	102.0	70.0	11.0	9.0
DN100	4"	100.0	305.0	325	18.0	154.5	17.0	220.0	180.0	156.0	22.0	2.0	8	18.0	102.0	70.0	11.0	9.0

GKV-225 1/2"~4" MATERIALS LIST

NO.	PART NAME	JIS-10K	PN16/40		CLASS150/300	
1	BODY	SCS13	1.4408	1.0619	CF8M	WCB
2	BALL	SCS13	CF8M	CF8	SS316	CF8
3	STEM	SS304	SS316	SS304	SS316	SS316
4	END CAP	SCS13	1.4408	1 1.0619	CF8M	WCB
5	BODY SEAL	PTFE.	PTFE.	PTFE.	PTFE.	PTFE.
6	SEAT	RTFE.	RTFE.	RTFE.	RTFE.	RTFE.
7	THRUST WASHER	PTFE.	PTFE.	PTFE.	PTFE.	PTFE.
8	STEM PACKING	PTFE.	PTFE.	PTFE.	PTFE.	PTFE.
9	THRUST WASHER	RTFE.+25%G.F.	RTFE.+25%G.F.		RTFE.+25%G.F.	
10	GLAND	SS304	SS304	SS304	SS304	SS304
11	HANDLE	SS304	SS304	SS304	SS304	SS304
12	HANDLE COVER	PLASTIC	PLASTIC	PLASTIC	PLASTIC	PLASTIC
13	STEM NUT	SS304	SS304	SS304	SS304	SS304
14	HANDLE WASHER	SS304	SS304	SS304	SS304	SS304
15	HANDLE NUT	SS304	SS304	SS304	SS304	SS304
16	LOCKING PAD	SS304	SS304	SS304	SS304	SS304
17	BELLEVILLE WASHER	SS304	SS304	SS304	SS304	SS304
18	STOP WASHER	SS304	SS304	SS304	SS304	SS304
19	STEM O-RING	VITON	VITON	VITON	VITON	VITON
20	STOP	SS304	SS304	SS304	SS304	SS304
21	STUD	A193 Gr.B8	A193 Gr.B8	A193 Gr.B8	A193 Gr.B8	A193 Gr.B8
22	NUT	A194 Gr.8	A194 Gr.8	A194 Gr.8	A194 Gr.8	A194 Gr.8

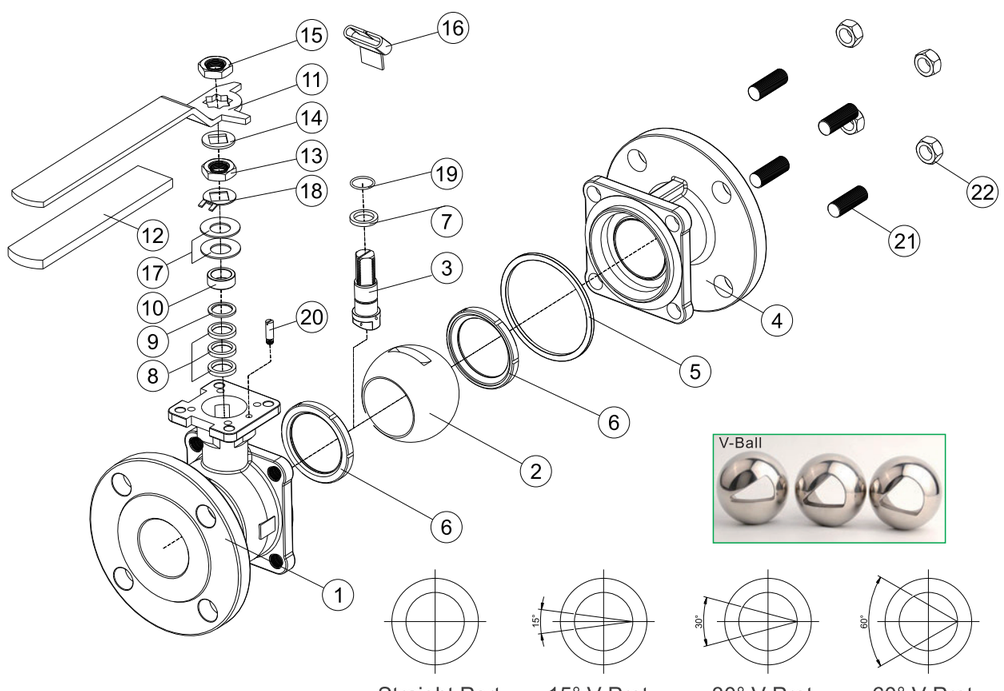

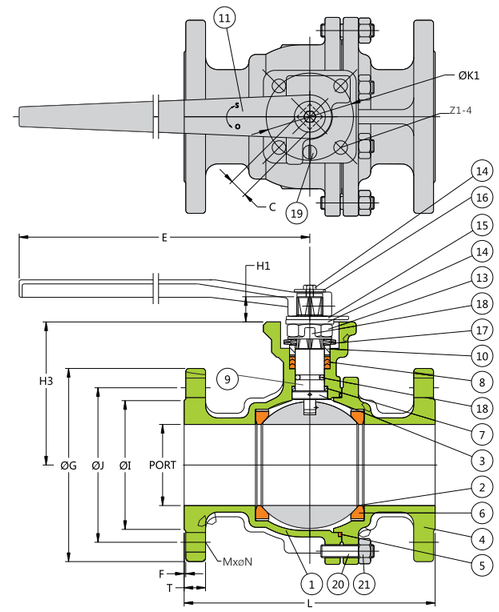

GKV-225 DN125-DN150
PN16/PN40(EN-1092)
Class150/300(ASME-B16.5)
JIS-10K(JIS-B2238)
PN16,GB/T9113.1

MATERIALS LIST

NO.	PART NAME	MATERIAL
1	BODY	CF8M/1.4408/CF8/1.4308/WCB/1.0619
2	BALL	CF8M/CF8
3	STEM	SS316/304
4	END CAP	CF8M/1.4408/CF8/1.4308/WCB/1.0619
5	BODY SEAL	PTFE.
6	SEAT	RTFE.
7	THRUST WASHER	RTFE.
8	STEM PACKING	RTFE.
9	THRUST WASHER	PTFE.+25%G.F.
10	GLAND	SS304
11	HANDLE	FCD45
13	STEM NUT	SS304
14	BOLT	SS304
15	TRIANGLE STOPPER	SS304
16	HANDLE WASHER	SS304
18	STEM O-RING	VITON
19	STOP	SS304
20	STUD	ASTM A193 Gr.B8
21	NUT	ASTM A194 Gr.8

GKV-225 PN16, DN125~DN150(EN-1092-1)

unit:mm

SIZE		PORT	L	E	H1	H3	C	ØG	ØJ	ØI	T	F	M	ØN	ØK1	Z1-4
DN125	5"	125.0	325.0	750.0	30.0	194.0	27.0	250.0	210.0	188.0	22.0	2.0	8	18.0	125.0	14.0
DN150	6"	150.0	350.0	750.0	30.0	213.0	27.0	285.0	240.0	212.0	22.0	2.0	8	22.0	125.0	14.0

GKV-225 PN40, DN125~DN150(EN-1092-1)

unit:mm

SIZE		PORT	L	E	H1	H3	C	ØG	ØJ	ØI	T	F	M	ØN	ØK1	Z1-4
DN125	5"	125.0	325.0	750.0	30.0	194.0	27.0	270.0	220.0	188.0	26.0	2.0	8	26.0	125.0	14.0
DN150	6"	150.0	350.0	750.0	30.0	213.0	27.0	300.0	250.0	218.0	28.0	2.0	8	26.0	125.0	14.0

GKV-225 150#,5"~6"(ASME-B16.5 Class150)

unit:mm

SIZE		PORT	L	E	H1	H3	C	ØG	ØJ	ØI	T	F	M	ØN	ØK1	Z1-4
DN125	5"	125.0	356.0	750.0	30.0	194.0	27.0	254.0	216.0	186.0	24.0	1.6	8	22.3	125.0	14.0
DN150	6"	150.0	394.0	750.0	30.0	213.0	27.0	279.4	241.0	216.0	25.4	1.6	8	22.3	125.0	14.0

GKV-225 300#,5"~6"(ASME-B16.5 Class300)

unit:mm

SIZE		PORT	L	E	H1	H3	C	ØG	ØJ	ØI	T	F	M	ØN	ØK1	Z1-4
DN125	5"	125.0	381.0	750.0	30.0	194.0	27.0	279.4	235.0	188.0	35.0	1.6	8	22.3	125.0	14.0
DN150	6"	150.0	403.0	750.0	30.0	213.0	27.0	317.5	269.8	216.0	36.6	1.6	8	22.3	125.0	14.0

GKV-225 10K,125A~150A(JIS-B2238 10K)

unit:mm

SIZE		PORT	L	E	H1	H3	C	ØG	ØJ	ØI	T	F	M	ØN	ØK1	Z1-4
125A	5"	125.0	356.0	750.0	30.0	194.0	27.0	250.0	210.0	186.0	20.0	2.0	8	23.0	125.0	14.0
150A	6"	150.0	394.0	750.0	30.0	213.0	27.0	280.0	240.0	212.0	22.0	2.0	8	23.0	125.0	14.0

GKV-225 PN16,DN125~DN150(GB/T9113.1)

unit:mm

SIZE		PORT	L	E	H1	H3	C	ØG	ØJ	ØI	T	F	M	ØN	ØK1	Z1-4
DN125	5"	125.0	356.0	750.0	30.0	194.0	27.0	250.0	210.0	188.0	22.0	2.0	8	18.0	125.0	14.0
DN150	6"	150.0	394.0	750.0	30.0	213.0	27.0	285.0	240.0	212.0	22.0	2.0	8	22.0	125.0	14.0

GKV-225L~DN15 DN100(1/2"~4")

- BLOW-OUT PROOF STEM/ FULL PORT
- ISO 5211 MOUNTING FLANGE
- TEMPERATURE RANGE: -20 to 180℃

GKV-225L PN16/PN40
- DESIGN:EN12516-1
- FLANGE DIMENSIONS: EN 1092-1 TYPE 21 PN16/40(RF SF)
- FACE TO FACE:EN 558-1 F4/F5(DIN 3202 F4/F5)
- TEST: EN-12266-1

GKV-225L 150# 300#
- DESIGN:ANSI B16.34
- FLANGE DIMENSIONS: ASME B16.5 CLASS150/300
- FACE TO FACE: ASME B16.1
- TEST: API-598

GKV-225L 10K
- DESIGN:ANSI B16.34
- FLANGE DIMENSIONS: JIS B2238 10K
- FACE TO FACE: JIS B2002 (ANSI B16.1)

From 2-1/2 with pipe handie for long term&smooth usage

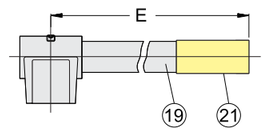

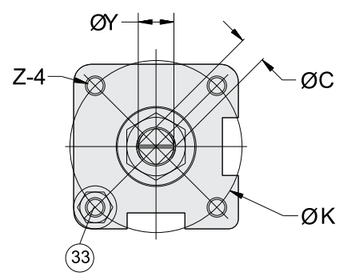

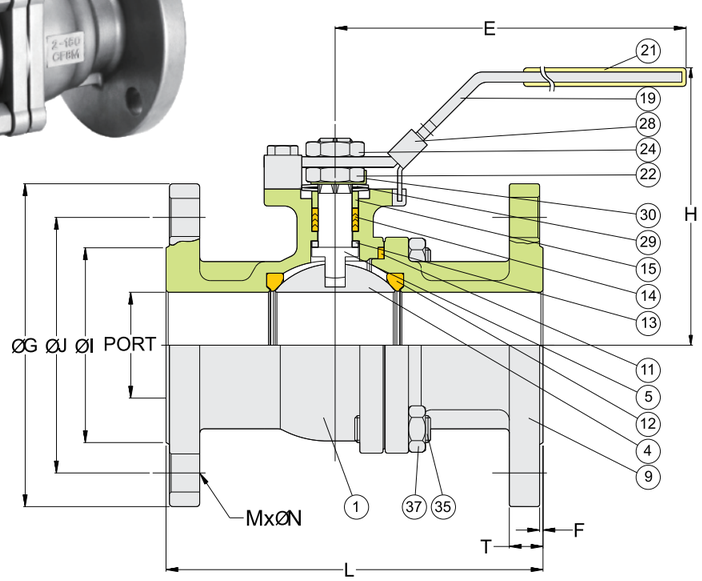

DRAWING FOR ½"TO 4"

GEKO CONTROL-VALVES
GKV-225L
FULL PORT TWO-PIECE BALL VALVE FLANGE END

GKV-225L DN15~DN100 (1/2"~4")

GKV-225L PN16/40 DN15-DN50

unit:mm

SIZE		PORT	L	E	H	H2	H4	C	ØY	ØG	ØJ	ØI	T	F	M	ØN	ØK	Z
DN15	1/2"	15.0	115.0	132.0	80.0	8.5	38.5	9.0	11.2	95.0	65.0	45.0	16.0	2.0	4	14.0	42.0	M5*0.8P
DN20	3/4"	20.0	120.0	132.0	84.5	8.5	42.5	9.0	11.2	105.0	75.0	58.0	18.0	2.0	4	14.0	42.0	M5*0.8P
DN25	1"	25.0	125.0	166.0	102.0	12.0	52.0	11.0	14.3	115.0	85.0	68.0	18.0	2.0	4	14.0	50.0	M6*1.0P
DN32	11/4"	32.0	130.0	166.0	105.0	12.0	56.0	11.0	14.3	140.0	100.0	78.0	18.0	2.0	4	18.0	50.0	M6*1.0P
DN40	11/2"	38.0	140.0	198.0	125.0	12.0	65.3	14.0	18.0	150.0	110.0	88.0	18.0	2.0	4	18.0	70.0	M8*1.25P
DN50	2"	50.0	150.0	198.0	132.0	12.0	73.8	14.0	18.0	165.0	125.0	102.0	20.0	2.0	4	18.0	70.0	M8*1.25P

GKV-225L PN16/40 DN65-DN100

SIZE		PORT	L	E	H	H2	H4	C	ØY	ØG	ØJ	ØI	T	F	M	ØN	ØK	Z
DN65	21/2"	64.0	170.0	300.0	178.0	23.0	92.5	17.0	22.3	185.0	145.0	122.0	18.0	2.0	4	18.0	102.0	M10*1.5P
DN80	3"	76.0	180.0	300.0	188.0	23.0	101.7	17.0	22.3	200.0	160.0	138.0	20.0	2.0	8	18.0	102.0	M10*1.5P
DN100	4"	100.0	190.0	450.0	202.0	23.0	119.0	17.0	22.3	220.0	180.0	158.0	20.0	2.0	8	18.0	102.0	M10*1.5P

GKV-225L 1/2"~4"（ANSI-Class 150#）

SIZE		PORT	L	E	H	H2	H4	C	ØY	ØG	ØJ	ØI	T	F	M	ØN	ØK	Z
DN15	1/2"	15.0	108.0	132.0	80.0	8.5	38.5	6.4	9.6	89.0	60.5	35.0	11.2	1.6	4	16.0	42.0	M5*0.8P
DN20	3/4"	20.0	117.0	132.0	84.5	8.5	42.5	6.4	9.6	98.6	70.0	43.0	12.7	1.6	4	16.0	42.0	M5*0.8P
DN25	1"	25.0	127.0	166.0	102.0	12.0	52.0	8.0	11.2	108.0	79.2	51.0	14.3	1.6	4	16.0	50.0	M6*1.0P
DN32	11/4"	32.0	140.0	166.0	105.0	12.0	56.0	8.0	11.2	117.5	88.9	63.5	15.9	1.6	4	16.0	50.0	M6*1.0P
DN40	11/2"	38.0	165.0	198.0	125.0	12.0	65.3	9.5	16.0	127.0	98.6	73.2	17.5	1.6	4	16.0	70.0	M8*1.25P
DN50	2"	50.0	178.0	198.0	132.0	12.0	73.8	9.5	16.0	152.5	120.7	92.0	19.1	1.6	4	19.0	70.0	M8*1.25P
DN65	21/2"	64.0	190.0	300.0	178.0	23.0	92.5	17.0	28.0	177.8	139.7	104.7	23.3	1.6	4	19.0	102.0	M10*1.5P
DN80	3"	76.0	203.0	300.0	188.0	23.0	101.7	17.0	28.0	190.5	152.4	127.0	23.9	1.6	4	19.0	102.0	M10*1.5P
DN100	4"	100.0	229.0	450.0	202.0	23.0	119.0	17.0	28.0	228.6	191.0	157.2	23.9	1.6	8	19.0	102.0	M10*1.5P

GKV-225L 1/2"~4"（ANSI-Class 300#）

unit:mm

SIZE	PORT	L	E	H	H2	H4	C	ØY	ØG	ØJ	ØI	T	F	M	ØN	ØK	Z
1/2"	15.0	140.0	132.0	80.0	8.5	38.5	6.4	9.6	95.3	66.5	35.0	14.3	1.6	4	16.0	42.0	M5*0.8P
3/4"	20.0	152.0	132.0	84.5	8.5	42.5	6.4	9.6	117.4	82.6	43.0	15.9	1.6	4	19.1	42.0	M5*0.8P
1"	25.0	165.0	166.0	102.0	12.0	52.0	8.0	11.2	124.0	88.9	51.0	17.5	1.6	4	19.1	50.0	M6*1.0P
11/4"	32.0	178.0	166.0	105.0	12.0	56.0	8.0	11.2	133.4	98.6	63.5	19.1	1.6	4	19.1	50.0	M6*1.0P
11/2"	38.0	190.0	198.0	125.0	12.0	65.3	9.5	16.0	155.5	114.3	73.2	20.7	1.6	4	22.3	70.0	M8*1.25P
2"	50.0	216.0	198.0	132.0	12.0	73.8	9.5	16.0	165.1	127.0	92.0	22.3	1.6	8	19.1	70.0	M8*1.25P
21/2"	64.0	241.0	300.0	178.0	23.0	92.5	17.0	28.0	190.5	149.4	104.7	25.4	1.6	8	22.3	102.0	M10*1.5P
3"	76.0	283.0	300.0	188.0	23.0	101.7	17.0	28.0	209.6	168.1	127.0	28.6	1.6	8	22.3	102.0	M10*1.5P
4"	100.0	305.0	450.0	202.0	23.0	119.0	17.0	28.0	254.0	200.2	157.2	31.8	1.6	8	22.3	102.0	M10*1.5P

GKV-225L 10K 15A-100A(JIS-10K)

SIZE		PORT	L	E	H	H2	H4	C	ØY	ØG	ØJ	ØI	T	F	M	ØN	ØK	Z
15A	1/2"	15.0	108.0	132.0	80.0	8.5	38.5	6.4	9.6	95.0	70.0	51.0	12.0	1.0	4	15.0	42.0	M5*0.8P
20A	3/4"	20.0	117.0	132.0	84.5	8.5	42.5	6.4	9.6	100.0	75.0	56.0	14.0	1.0	4	15.0	42.0	M5*0.8P
25A	1"	25.0	127.0	166.0	102.0	12.0	52.0	8.0	11.2	125.0	90.0	67.0	14.0	1.0	4	19.0	50.0	M6*1.0P
32A	11/4"	32.0	140.0	166.0	105.0	12.0	56.0	8.0	11.2	135.0	100.0	76.0	16.0	2.0	4	19.0	50.0	M6*1.0P
40A	11/2"	38.0	165.0	198.0	125.0	12.0	65.3	9.5	16.0	140.0	105.0	81.0	16.0	2.0	4	19.0	70.0	M8*1.25P
50A	2"	50.0	178.0	198.0	132.0	12.0	73.8	9.5	16.0	155.0	120.0	96.0	16.0	2.0	4	19.0	70.0	M8*1.25P
65A	21/2"	64.0	190.0	300.0	178.0	23.0	92.5	17.0	28.0	175.0	140.0	116.0	18.0	2.0	4	19.0	102.0	M10*1.5P
80A	3"	76.0	203.0	300.0	188.0	23.0	101.7	17.0	28.0	185.0	150.0	126.0	18.0	2.0	8	19.0	102.0	M10*1.5P
100A	4"	100.0	229.0	450.0	202.0	23.0	119.0	17.0	28.0	210.0	175.0	151.0	18.0	2.0	8	19.0	102.0	M10*1.5P

GKV-225L DN15~DN100(1/2"~4")

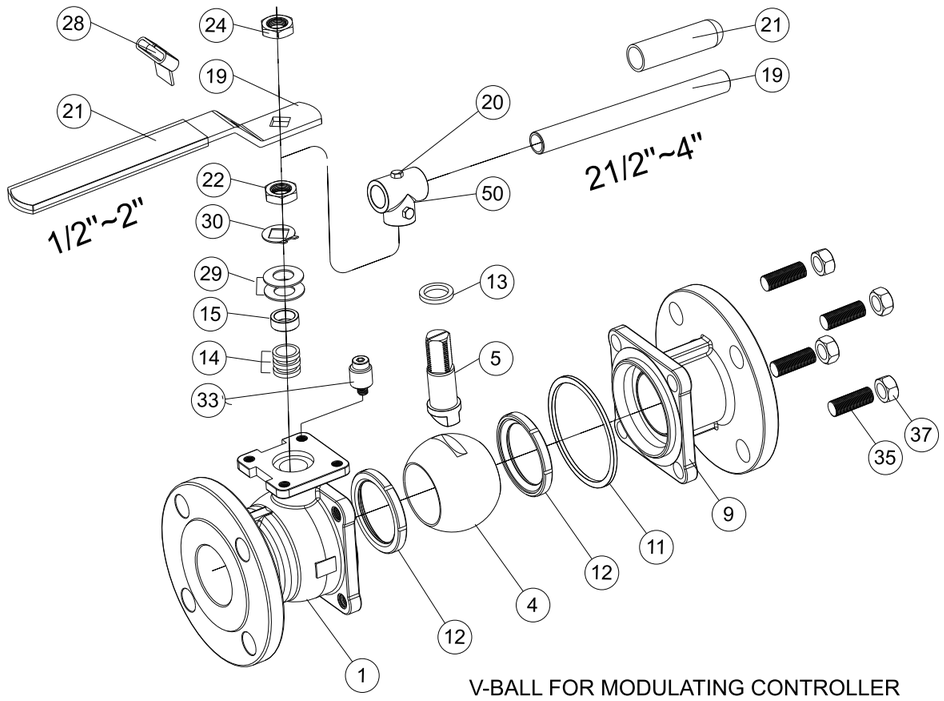

V-BALL FOR MODULATING CONTROLLER

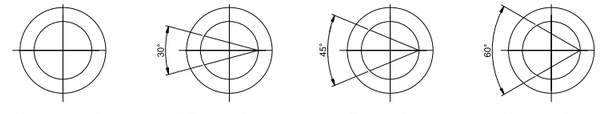

Straight Port 30° V-Prot 45° V-Prot 60° V-Prot

NO.	PART NAME	PN16/40		Class150/300		JIS-10K		Q'TY
1	BODY	1.4408	1.0619	CF8M	WCB	SCS14	SCPH2	1
4	BALL	1.4408	1.0619	CF8M	CF8	SCS14	SCS13	1
5	STEM	SS316	SS304	SS316	SS304	SS316	SS304	1
9	END CAP	1.4408	1.0619	CF8M	WCB	SCS14	SCPH2	1
11	BODY SEAL	PTFE.						1
12	SEAT	RTFE.						2
13	THRUST WASHER	PTFE.						1
14	STEM PACKING	PTFE.						1SET
15	GLAND BUSH	SS304						1
19	HANDLE	LRON						1
20	SET BOLT	SS304						2
21	HANDLE COVER	PLASTIC						1~2
24	HANDLE NUT	SS304						1
28	STOP PLATE	SS304						1
29	BELLEVILLE WASHER	SS301						2
30	TAB WASHER	SS304						1
33	STOP PIN	SS304						1
35	BODY BOLT	A193 Gr.B8	A193 Gr.B7					6~8
37	BOLT NUT	A193 Gr.8	A193 Gr.2HM					6~8
50	HANDLE ADAPTER	ASTM A351 Gr.CF8						1

GEKO CONTROL-VALVES
GKV-225L
FULL PORT TWO-PIECE BALL VALVE FLANGE END

GKV-225L DN125~DN150(5"~6")

- BLOW-OUT PROOF STEM/ FULL PORT
- ISO 5211 MOUNTING FLANGE
- TEMPERATURE RANGE: -20 to 180℃

GKV-225L PN16/PN40
- DESIGN:EN12516-1
- FLANGE DIMENSIONS: EN 1092-1 TYPE 21 PN16/40(RF SF)
- FACE TO FACE:EN 558-1 F4/F5(DIN 3202 F4/F5)
- TEST: EN-12266-1

GKV-225L 150# 300#
- DESIGN:ANSI B16.34
- FLANGE DIMENSIONS: ANSI B16.5 CLASS150/300
- FACE TO FACE: ANSI B16.1
- TEST: API-598

GKV-225L 10K
- DESIGN:ANSI B16.34
- FLANGE DIMENSIONS: JIS B2238 10K
- FACE TO FACE: JIS B2002 (ANSI B16.1)
- TEST: API-598

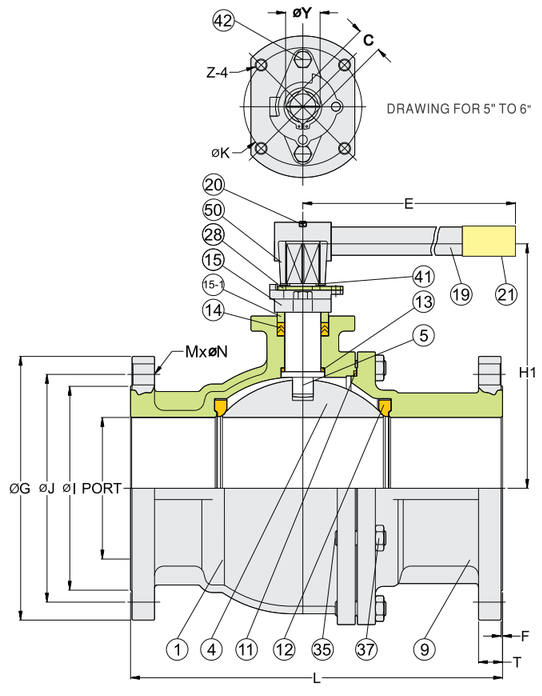

MATERIALS LIST

NO.	PART NAME	PN16/40		150# ,300#		JIS-10K		Q'TY
1	BODY	1.4408	1.0619	CF8M	WCB	SCS14	SCPH2	1
4	BALL	1.4408	CF8	CF8M	CF8	SCS14	SCS13	1
5	STEM	SS316	SS304	SS316	SS304	SS316	SS304	1
9	END CAP	1.4408	1.0619	CF8M	WCB	SCS14	SCPH2	1
11	BODY SEAL	PTFE.						1
12	SEAT	PTFE.						2
13	THRUST WASHER	PTFE.						1
14	STEM PACKING	PTFE.						1SET
15	GLAND	CF8						1
15-1	GLAND BUSH	SS304						1
19	HANDLE	LRON						1
20	SET BOLT	SS304						1
21	HANDLE COVER	PLASTIC						1
28	STOP PLATE	SS304						1
35	BODY BOLT	A193 Gr.B8 / A193 Gr.B7						8
37	BOLT NUT	A194 Gr.8 / A193 Gr.2HM						8
41	SNAP RING	SS304						1
42	GLAND BOLT	SS304						2
50	HANDLE ADAPTER	SS.304						1

GKV-225L
FULL PORT TWO-PIECE BALL VALVE FLANGE END

GKV-225L DN125~DN150(5"~6")

GKV-225L PN16 DN125-DN150

unit:mm

SIZE		PORT	L	E	H1	H2	H4	C	ØY	ØG	ØJ	ØI	T	F	M	ØN	ØK	Z
DN125	5"	125.0	325.0	600.0	233.0	45.0	163.0	23.0	36.0	250.0	210.0	188.0	22.0	2.0	8	18.0	125	M12*1.75P
DN150	6"	150.0	350.0	800.0	259.0	45.0	182.5	23.0	36.0	285.0	240.0	212.0	22.0	2.0	8	22.0	125	M12*1.75P

GKV-225L PN40 DN125-DN150

unit:mm

SIZE		PORT	L	E	H1	H2	H4	C	ØY	ØG	ØJ	ØI	T	F	M	ØN	ØK	Z
DN125	5"	125.0	325.0	600.0	233.0	45.0	163.0	23.0	36.0	270.0	220.0	188.0	26.0	2.0	8	26.0	125	M12*1.75P
DN150	6"	150.0	350.0	800.0	259.0	45.0	182.5	23.0	36.0	300.0	250.0	218.0	28.0	2.0	8	26.0	125	M12*1.75P

GKV-225L15 Class150 5"-6"

unit:mm

SIZE		PORT	L	E	H1	H2	H4	C	ØY	ØG	ØJ	ØI	T	F	M	ØN	ØK	Z
DN125	5"	125.0	325.0	600.0	233.0	45.0	163.0	23.0	36.0	254.0	216.0	186.0	24.0	1.6	8	22.3	125	M12*1.75P
DN150	6"	150.0	394.0	800.0	259.0	45.0	182.5	23.0	36.0	279.4	241.3	216.0	25.4	1.6	8	22.3	125	M12*1.75P

GKV-225L15 Class300 5"-6"

unit:mm

SIZE		PORT	L	E	H1	H2	H4	C	ØY	ØG	ØJ	ØI	T	F	M	ØN	ØK	Z
DN125	5"	125.0	381.0	600.0	233.0	45.0	163.0	23.0	36.0	279.4	235.0	186.0	35.0	1.6	8	22.3	125	M12*1.75P
DN150	6"	150.0	403.0	800.0	259.0	45.0	182.5	23.0	36.0	317.5	269.8	216.0	36.6	1.6	12	22.3	125	M12*1.75P

GKV-225L 10K JIS-10K

unit:mm

SIZE		PORT	L	E	H1	H2	H4	C	ØY	ØG	ØJ	ØI	T	F	M	ØN	ØK	Z
DN125	5"	125.0	325.0	600.0	233.0	45.0	163.0	23.0	36.0	250.0	210.0	182.0	20.0	2.0	8	23.0	125	M12*1.75P
DN150	6"	150.0	394.0	800.0	259.0	45.0	182.5	23.0	36.0	280.0	240.0	212.0	22.0	2.0	8	23.0	125	M12*1.75P

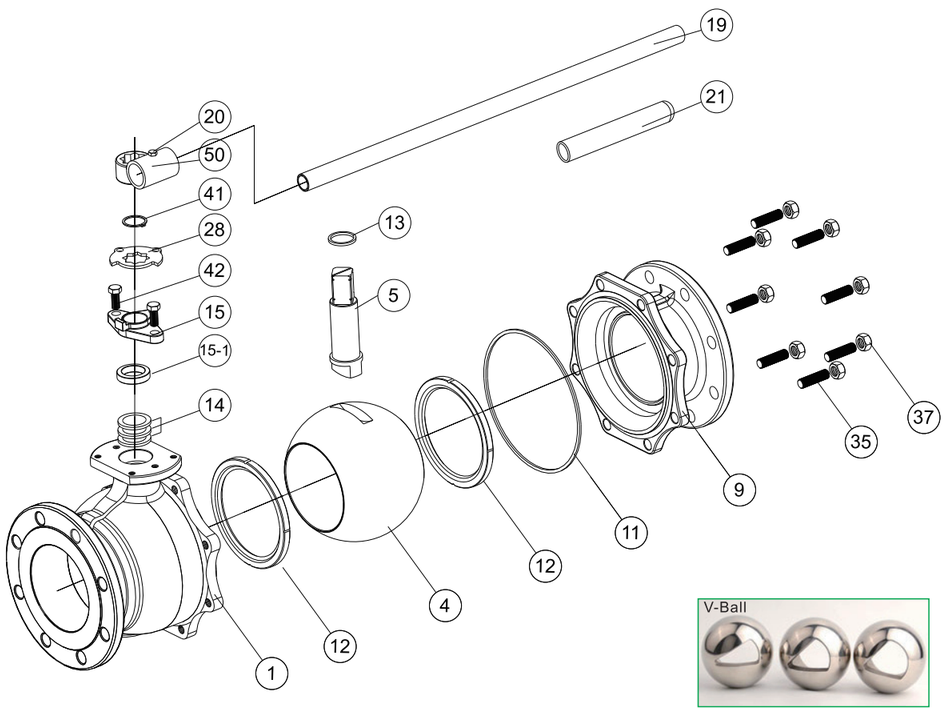

GKV-212
ONE-PIECE FULL PORT BALL VALVE FLANGE END

ANSI CLASS 150, PN16

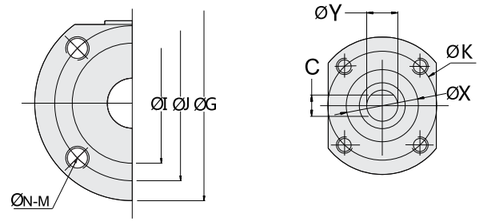

DN15~DN150 (1/2" ~6")
FULL PORT ONE-PIECE BALL VALVE FLANGE END
BLOW-OUT PROOF STEM/ FULL PORT
ISO 5211 MOUNTING DEVICE
TEMPERATURE RANGE: -20 to 180℃
FLANGE DIMENSIONS :
EN 1092-1 PN16
ANSI B16.5 CLASS 150
TEST : EN-12266-1
API-598

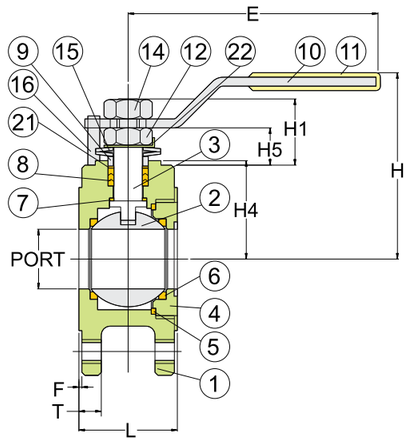

GKV-212 PN16 DIMENSIONS

unit:mm

SIZE		PORT	L	E	H	H1	H4	H5	C	ØX	ØY	ØG	ØJ	ØI	T	F	ØK	N
DN15	1/2"	15	35	116	70	19.2	32	10.5	6.35	25	9.6	95	65	45	7.0	2	36	M12
DN20	3/4"	20	38	116	74	16.5	38	7.5	6.35	25	9.6	105	75	58	7.0	2	36	M12
DN25	1"	25	44	165	75	17.5	42	7.5	6.35	25	9.6	115	85	65	7.5	2	36	M12
DN32	1-1/4"	32	54	165	87	24.0	50	12.0	8.0	32	11.2	140	100	78	17.0	2	42	M16
DN40	1-1/2"	38	62	193	90	24.0	54	12.0	8.0	35	11.2	150	110	88	19.0	2	50	M16
DN50	2"	50	80	193	99	24.0	62	12.0	8.0	35	11.2	165	125	102	19.5	2	50	M16
DN65	2-1/2"	64	101	235	141	25.5	82	14.5	9.5	53	16	185	145	122	17.0	2	70	M16
DN80	3"	76	118	235	150	25.5	91	14.5	9.5	53	16	200	160	138	20.0	3.0	70	M16
DN100	4"	96	150	266	172	49.0	107	24.0	17	55	28	220	180	158	21.0	3.0	102	M16
DN125	5"	118	179	400	205	50.0	117	31.0	17	55	28	250	210	188	22.0	3.0	102	M16
DN150	6"	135	202	600	220	50.0	130	31.0	17	60	28	285	240	212	22.0	3.0	125	M20

GKV-212 150#DIMENSIONS

unit:mm

SIZE	DN	ISO-5211	L	E	H	H1	H4	H5	C	ØY	ØG	ØJ	ØI	T	F	ØK	ØN
1/2"	15	F03	35	116	70	19.2	32	10.5	6.35	9.6	89	60.5	35	7.0	1.6	36	1/2"
3/4"	20	F03	38	116	74	16.5	38	7.5	6.35	9.6	98.6	69.9	43	7.0	1.6	36	1/2"
1"	25	F03	42	165	75	17.5	42	7.5	6.35	9.6	108.0	79.2	51	7.5	1.6	36	1/2"
1-1/4"	32	F04	54	165	87	24.0	50	12.0	8.0	11.2	117.5	88.9	63.5	15.9	1.6	42	5/8"
1-1/2"	40	F05	62	193	90	24.0	54	12.0	8.0	11.2	127.0	98.6	73.2	17.5	1.6	50	5/8"
2"	50	F05	80	193	99	24.0	62	12.0	8.0	11.2	152.5	120.7	92	19.1	1.6	50	5/8"
2-1/2"	65	F07	101	235	141	25.5	82	14.5	9.5	16.0	177.8	139.7	104.7	22.3	1.6	70	5/8"
3"	80	F07	118	235	150	25.5	91	14.5	9.5	16.0	190.5	152.4	127.0	23.9	1.6	70	5/8"
4"	100	F10	153	266	172	49.0	107	24.0	17.0	28.0	228.6	190.5	157.2	23.9	1.6	102	5/8"

GKV-212

ONE-PIECE FULL PORT BALL VALVE FLANGE END

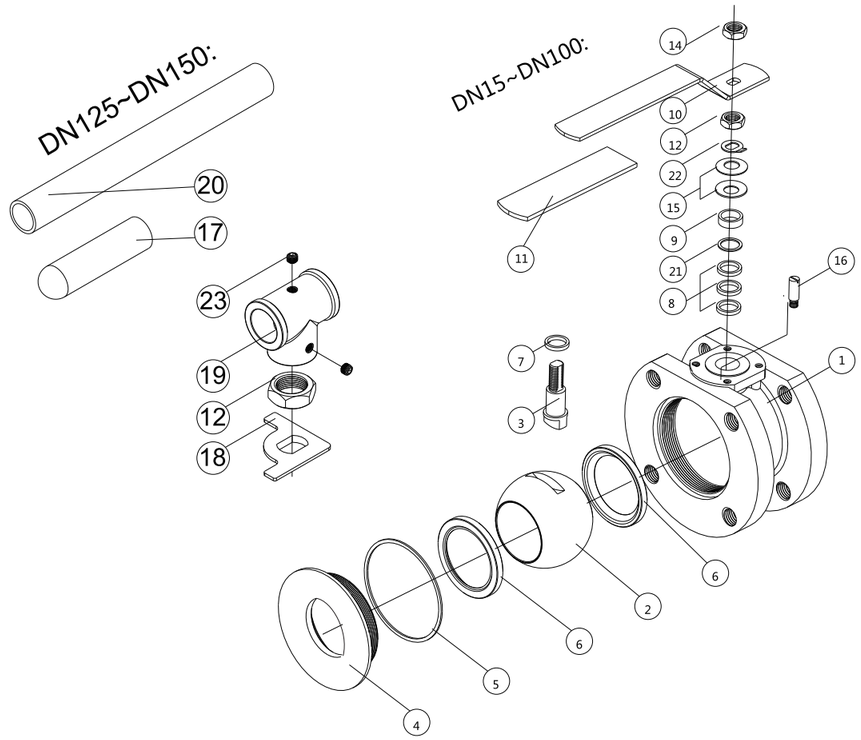

MATERIALS LIST

NO.	PART NAME	PN 16 MATERIAL	CLASS 150%MATERIAL
1	BODY	1.4408 / EN 1503-1	CF8M,CF8(1.4408)
2	BALL	CF8M	CF8M
3	STEM	SS316	AISI 316
4	INSERT CAP	1.4408 / EN 1503-1	CF8M,CF8(1.4408)
5	BODY SEAL	PTFE.	PTFE
6	SEAT	PTFE.	PTFE
7	THRUST WASHER	PTFE.	PTFE
8	STEM PACKING	PTFE.	PTFE
9	GLAND	SS304	AISI 304
10	HANDEL	SS304	AISI 304
11	HANDEL COVER	PLASTIC	AISI 304
12	STEM NUT	SS304	AISI 304
14	HANDEL NUT	SS304	AISI 304
15	BELLEVILLE WASHER	SS301	AISI 304
16	STOP PIN	SS304	PLASTIC
17	HANDLE SLEEVE	PLATIC	PLATIC
18	STOP BOLT	SS304	SS304
19	HANDLE ADAPTER	CF8	CF8
20	HANDLE	STEEL	STEEL
21	PACKING FOLLWER	PTFE.+25GG.F.	PTFE.+25GG.F.
22	TAB WASHER	SS304	AISI 304
23	SET BOLT	SS304	AISI 304

GKV-237

FULL PORT THREE-PIECE MOUNT DIRECT TYPE FLANGE END BALL VALVE

- ISO 5211 DIRECT MOUNTING PAD
- BLOW-OUT PROOF STEM
- WORKING PRESSURE(CWP) :PN16 bar/PN40 bar
- TEMPERATURE RANGE: -20 to 180℃
- LOCKING DEVICE
- END FLANGE DIMENSION:
  DIN 2543 PN16/DIN 2545 Pn40 (EN 1092-1 RF)
- FACE TO FACE:EN 558-1/ F1

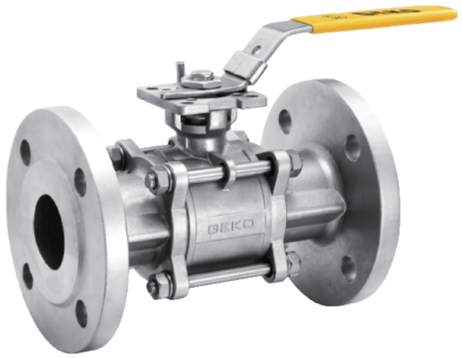

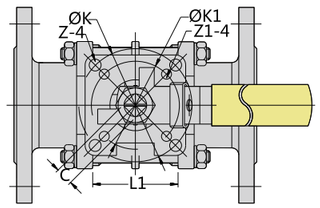

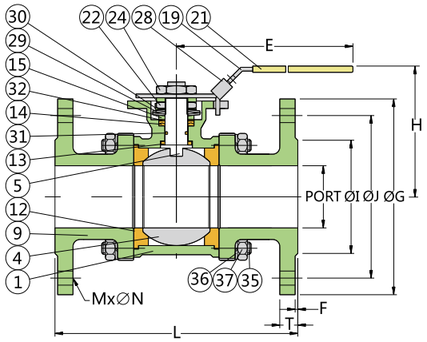

MATERIALS LIST

NO.	PART NAME	MATERIAL
1	BODY	1.4408 / EN1503-1
4	BALL	CF8M / EN1503-2
5	STEM	SS316
9	END CAP	1.4408 / EN1503-1
12	SEAT	RTFE.
13	THRUST WASHER	RTFE.
14	STEM PACKING	RTFE.
15	GLAND BUSH	SS304
19	HANDLE	SS304
21	HANDLE COVER	VINYL GRIP
22	STEM NUT	SS304
24	HANDLE NUT	SS304
28	LOCKING PAD	SS304
29	BELLEVILLE WASHER	SS304-CSP
30	TAB WASHER	SS304
31	O-RING	VITON
32	PACKING FOLLWER	PTFE.+25GGF
35	BODY BOLT	SS304
36	BOLT WASHER	SS304
37	BOLT NUT	SS304

PN16 DIMENSIONS

Unit:mm

SIZE		PORT	L	E	H	C	ØG	ØJ	ØI	T	F	MxØN	ØK	ØK1	Z-4	Z1-4	L1
DN15	1/2"	15.0	130.0	112.0	74.0	9.0	95.0	65.0	45.0	16.0	2.0	4xØ14	50.0	36.0	7.0	6.0	22.5
DN20	3/4"	20.0	150.0	112.0	81.0	9.0	105.0	75.0	58.0	18.0	2.0	4xØ14	50.0	36.0	7.0	6.0	27.5
DN25	1"	25.0	160.0	136.0	90.5	9.0	115.0	85.0	68.0	18.0	2.0	4xØ14	50.0	36.0	7.0	6.0	34.0
DN32	1-1/4"	32.0	180.0	185.0	98.7	9.0	140.0	100.0	78.0	18.0	2.0	4xØ18	50.0	36.0	7.0	6.0	42.5
DN40	1-1/2"	38.0	200.0	198.0	115.3	14.0	150.0	110.0	88.0	18.0	3.0	4xØ18	70.0	50.0	9.0	7.0	52.0
DN50	2"	50.0	230.0	198.0	124.0	14.0	165.0	125.0	102.0	20.0	3.0	4xØ18	70.0	50.0	9.0	7.0	63.5
DN65	2-1/2"	65.0	290.0	267.0	155.0	17.0	185.0	145.0	122.0	18.0	3.0	4xØ18	102.0	70.0	11.0	9.0	85.5
DN80	3"	80.0	310.0	267.0	208.5	17.0	200.0	160.0	138.0	20.0	3.0	8xØ18	102.0	70.0	11.0	9.0	102.0
DN100	4"	100.0	350.0	322.0	216.7	17.0	220.0	180.0	158.0	20.0	3.0	8xØ18	102.0	70.0	11.0	9.0	128.5

PN40 DIMENSIONS

Unit:mm

SIZE		PORT	L	E	H	C	ØG	ØJ	ØI	T	F	MxØN	ØK	ØK1	Z-4	Z1-4	L1
DN15	1/2"	15.0	130.0	112.0	74.0	9.0	95.0	65.0	45.0	16.0	2.0	4xØ14	50.0	36.0	7.0	6.0	22.5
DN20	3/4"	20.0	150.0	112.0	81.0	9.0	105.0	75.0	58.0	18.0	2.0	4xØ14	50.0	36.0	7.0	6.0	27.5
DN25	1"	25.0	160.0	136.0	90.5	9.0	115.0	85.0	68.0	18.0	2.0	4xØ14	50.0	36.0	7.0	6.0	34.0
DN32	1-1/4"	32.0	180.0	185.0	98.7	9.0	140.0	100.0	78.0	18.0	2.0	4xØ18	50.0	36.0	7.0	6.0	42.5
DN40	1-1/2"	38.0	200.0	198.0	115.3	14.0	150.0	110.0	88.0	18.0	3.0	4xØ18	70.0	50.0	9.0	7.0	52.0
DN50	2"	50.0	230.0	198.0	124.0	14.0	165.0	125.0	102.0	20.0	3.0	4xØ18	70.0	50.0	9.0	7.0	63.5
DN65	2-1/2"	65.0	290.0	267.0	155.0	17.0	185.0	145.0	122.0	22.0	3.0	8xØ18	102.0	70.0	11.0	9.0	85.5
DN80	3"	80.0	310.0	267.0	208.5	17.0	200.0	160.0	138.0	24.0	3.0	8xØ18	102.0	70.0	11.0	9.0	102.0
DN100	4"	100.0	350.0	322.0	216.7	17.0	235.0	190.0	162.0	24.0	3.0	8xØ22	102.0	70.0	11.0	9.0	128.5

GEKO CONTROL-VALVES

GKV-237L

FULL PORT THREE-PIECE FLANGE END BALL VALVE

- BLOW-OUT PROOF STEM
- WORKING PRESSURE(CWP) :PN16 bar/PN40 bar
- TEMPERATURE RANGE: -20 to 180℃
- LOCKING DEVICE
- END FLANGE DIMENSION:
  DIN 2543 PN16/DIN 2545 PN40(EN 1092-1 RF)
- FACE TO FACE:EN 558-1/ F1

NO.	PART NAME	MATERIAL
1	BODY	1.4408 / EN1503
4	BALL	CF8M / EN1503
5	STEM	SS316
9	END CAP	1.4408 / EN1503
12	SEAT	PTFE.
13	THRUST WASHER	PTFE.
14	STEM PACKING	PTFE.
16	GLAND NUT	SS304
19	HANDLE	SS304
21	HANDLE COVER	PLASTIC
23	HANDLE WASHER	SS304
24	HANDLE NUT	SS304
28	LOCKING DEVICE	SS304 (OPTION)
35	BODY BOLT	SS304
36	BOLT WASHER	SS304
37	BOLT NUT	SS304

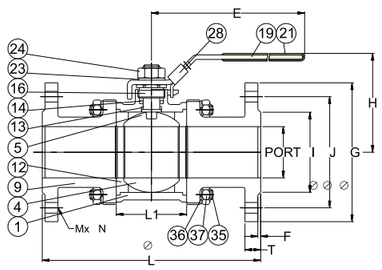

PN/16 DIMENSIONS

unit:mm

SIZE		PORT	L	E	H	ØG	ØJ	ØI	T	F	MxØN	C	L1
DN15	1/2"	15.0	130.0	122.9	88.0	95.0	65.0	45.0	16.0	2.0	4x∅14.0	5.0	22.5
DN20	3/4"	20.0	150.0	122.9	91.0	105.0	75.0	58.0	18.0	2.0	4x∅14.0	5.0	27.5
DN25	1"	25.0	160.0	144.9	104.0	115.0	85.0	68.0	18.0	2.0	4x∅14.0	8.0	34.0
DN32	1-1/4"	32.0	180.0	144.9	108.0	140.0	100.0	78.0	18.0	2.0	4x∅18.0	8.0	42.5
DN40	1-1/2"	38.0	200.0	188.9	121.0	150.0	110.0	88.0	18.0	3.0	4x∅18.0	10.0	52.0
DN50	2"	50.0	230.0	188.9	129.0	165.0	125.0	102.0	20.0	3.0	4x∅18.0	10.0	63.5
DN65	2-1/2"	65.0	290.0	255.3	152.0	185.0	145.0	122.0	22.0	3.0	8x∅18.0	10.0	85.5
DN80	3"	80.0	310.0	260.8	160.0	200.0	160.0	138.0	24.0	3.0	8x∅18.0	12.0	102.0
DN100	4"	100.0	350.0	322.2	174.0	235.0	190.0	162.0	24.0	3.0	8x∅22.0	16.0	128.5

PN/40 DIMENSIONS

unit:mm

SIZE		PORT	L	E	H	ØG	ØJ	ØI	T	F	MxØN	C	L1
DN15	1/2"	15.0	130.0	122.9	88.0	95.0	65.0	45.0	16.0	2.0	4x∅14.0	5.0	22.5
DN20	3/4"	20.0	150.0	122.9	91.0	105.0	75.0	58.0	18.0	2.0	4x∅14.0	5.0	27.5
DN25	1"	25.0	160.0	144.9	104.0	115.0	85.0	68.0	18.0	2.0	4x∅14.0	8.0	34.0
DN32	1-1/4"	32.0	180.0	144.9	108.0	140.0	100.0	78.0	18.0	2.0	4x∅18.0	8.0	42.5
DN40	1-1/2"	38.0	200.0	188.9	121.0	150.0	110.0	88.0	18.0	3.0	4x∅18.0	10.0	52.0
DN50	2"	50.0	230.0	188.9	129.0	165.0	125.0	102.0	20.0	3.0	4x∅18.0	10.0	63.5
DN65	2-1/2"	65.0	290.0	255.3	152.0	185.0	145.0	122.0	22.0	3.0	8x∅18.0	10.0	85.5
DN80	3"	80.0	310.0	260.8	160.0	200.0	160.0	138.0	24.0	3.0	8x∅18.0	12.0	102.0
DN100	4"	100.0	350.0	322.2	174.0	235.0	190.0	162.0	24.0	3.0	8x∅22.0	16.0	128.5

GEKO CONTROL-VALVES

GKV-143

3-WAY [L-PORT&T-PORT]BALL VALVE SCREWED END

- BLOW-OUT PROOF STEM
  ISO 5211 DIRECT MOUNTING PAD
- WORKING PRESSURE(CWP) :DN8~DN50 1000psi PN63 bar
- TEMPERATURE RANGE: -20 to 180℃
- LOCKING DEVICE
- THERE ARE FOUR SEATS
- L-PORTOR T-PORT AVAILABLE 360°POTARY HANDLE
- PIPE THREAD IN ACCORDANCE
  ANSI B1.20.1(NPT)
  DIN 259/DIN 2999
  ISO 228
  BSPT(PT)
  BSP(PF)

MATERIALS LIST

NO.	PART NAME	MATERIAL
1	BODY	ASTM A351 Gr.CF8M
4	BALL	ASTM A351 Gr.CF8M
5	STEM	SS316
9	CAP	ASTM A351 Gr.CF8M
11	BODY SEAL	PTFE.
12	SEAT	RTFE.
13	THRUST WASHER	RTFE.
14	STEM PACKING	RTFE.
15	GLAND BUSH	SS304
19	HANDLE	SS304
21	HANDLE COVER	PLASTIC
22	STEM NUT	SS304
23	HANDLE WASHER	SS304
24	HANDLE NUT	SS304
28	LOCKING PAD	SS304
29	BELLEVEILLE WASHER	SS304-CSP
30	STOP WASHER	SS304
31	O-RING	VITON
32	PACKING FOLLOWER	PTFE.+25%GF
33	STOP PIN	SS304

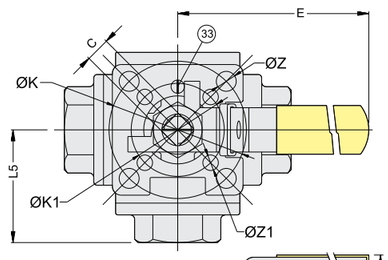

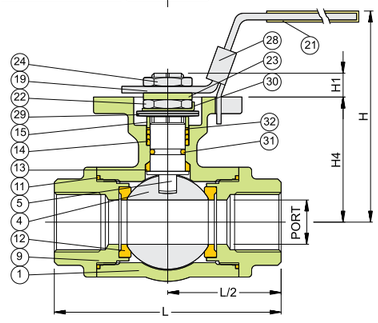

Flow Patterns for L-Port

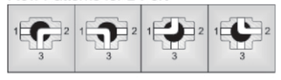

Flow Patterns for T-Port

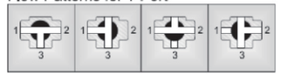

DIMENSIONS

unit:mm

SIZE		PORT	L	L5	E	H	H1	H4	C	Y	ØK		ØK1		Z	Z1
DN8	1/4"	11.0	75.7	37.3	112.0	77.5	9.0	38.2	9.0	12.0	42.0	F-04			6.0	
DN10	3/8"	11.0	75.7	37.3	112.0	77.5	9.0	38.2	9.0	12.0	42.0	F-04			6.0	
DN15	1/2"	12.7	75.7	37.3	112.0	77.5	9.0	38.2	9.0	12.0	42.0	F-04			6.0	
DN20	3/4"	16.0	86.6	44.7	112.0	82.0	9.0	45.2	9.0	12.0	42.0	F-04			6.0	
DN25	1"	20.0	102.4	51.4	136.5	93.7	11.0	56.5	11.0	15.8	50.0	F-05			7.1	
DN32	1-1/4"	25.0	118.2	57.7	188.0	101.1	11.0	61.9	11.0	15.8	50.0	F-05			7.1	
DN40	1-1/2"	32.0	125.8	62.7	197.5	120.3	14.3	78.3	14.0	20.8	70.0	F-07	50.0	F-05	9.2	7.1
DN50	2"	38.1	149.0	74.6	197.5	129.9	14.0	87.4	14.0	20.8	70.0	F-07	50.0	F-05	9.2	7.1

GKV-143L

3-WAY [L-PORT&T-PORT]BALL VALVE SCREWED END

- BLOW-OUT PROOF STEM
- WORKING PRESSURE(CWP) :DN 8~DN50 1000psi PN63 bar
- TEMPERATURE RANGE: -20 to 180℃
- LOCKING DEVICE
- THERE ARE FOUR SEATS
- L-PORT OR T-PORT AVAILABLE 360°POTARY HANDLEE
- PIPE THREAD IN ACCORDANCE
  ANSI B1.20.1(NPT)
  DIN 259/DIN 2999
  ISO 228
  BSPT(PT)
  BSP(PF)

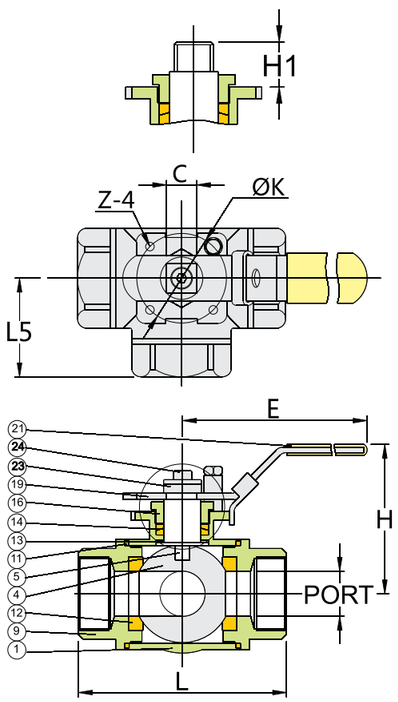

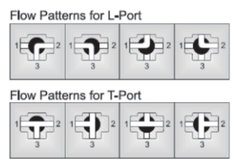

MATERIAL LIST

NO.	PART NAME	MATERIAL
1	BODY	ASTM A351 Gr.CF8M
4	BALL	ASTM A351 Gr.CF8M
5	STEM	SS316
9	END CAP	ASTM A351 Gr.CF8M
11	BODY SEAL	PTFE.
12	SEAT	PTFE.
13	THRUST WASHER	PTFE.
14	STEM PACKING	PTFE.
16	GLAND NUT	SS304
19	HANDLE	SS304
21	HANDLE COVER	VINYL GRIP
23	HANDLE WASHER	SS304
24	HANDLE NUT	SS304
28	LOCKING PAD	SS304

DIMENSIONS

unit:mm

SIZE		PORT	L	L5	E	H	H1	C	ØK	Z-4
DN8	1/4"	11.0	69.4	34.6	133.4	60.7	10.7	9.0	42.0	M5xP0.8
DN10	3/8"	11.0	69.4	34.6	133.4	60.7	10.7	9.0	42.0	M5xP0.8
DN15	1/2"	12.5	75.7	37.3	133.4	64.1	10.7	9.0	42.0	M5xP0.8
DN20	3/4"	16.0	86.6	44.7	178.5	82.4	13.9	11.0	50.0	M6xP1.0
DN25	1"	20.0	102.4	51.4	178.5	86.1	20.0	11.0	50.0	M6xP1.0
DN32	1-1/4"	25.0	118.2	57.7	209.9	91.4	23.8	11.0	50.0	M6xP1.0
DN40	1-1/2"	32.0	125.8	62.7	208.0	102.7	25.8	11.0	70.0	M8xP1.25
DN50	2"	38.0	149.0	74.6	229.9	110.7	25.3	14.0	70.0	M8xP1.25
DN65	2-1/2"	50.0	160.0	80.0	229.9	115.8	24.5	14.0	70.0	M8xP1.25
DN80	3"	65.0	185.0	92.5	265.0	132.0	25.5	17.0	102.0	M10xP1.5

GKV-144

3-WAY/4-WAY BALL VALVE SCREWED END

- BLOW-OUT PROOF STEM
- ISO 5211 DIRECT MOUNTING PAD
- WORKING PRESSURE(CWP) :DN8~DN100 1000psi
  PN63bar
- TEMPERATURE RANGE: -20 to 180℃
- LOCKING DEVICE
- THERE ARE FOUR SEATS
- L-PORT OR T-PORT OR X-PORT AVAILABLE 360°POTARY

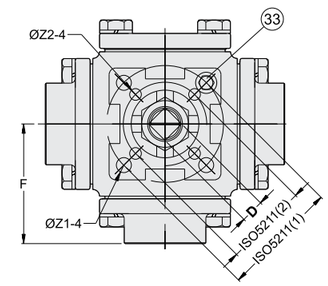

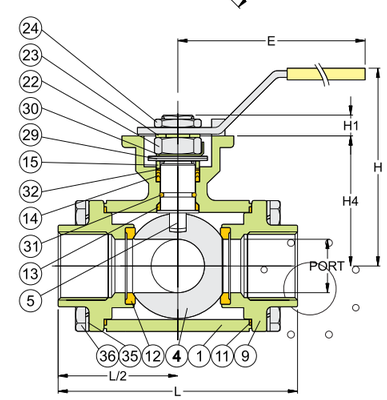

MATERIALS LIST

NO.	PART NAME	MATERIAL	Q'TY
1	BODY	ASTM A351 Gr.CF8M	1
4	BALL	ASTM A351 Gr.CF8M	1
5	STEM	SS316	1
9	END CAP	ASTM A351 Gr.CF8M	4
11	BODY SEAL	PTFE.	4
12	SEAT	PTFE.	4
13	THRUST WASHER	PTFE.	1
14	STEM PACKING	PTFE.	1SET
15	GLAND	SS304	1
19	HANDLE	SS304	1
21	HANDLE COVER	PLASTIC	1
22	STEM NUT	SS304	1
23	HANDLE WASHER	SS304	1
24	HANDLE NUT	SS304	1
29	BELLEVILLE WASHER	SS410	2
30	STOP WASHER	SS304	1
31	O-RING	VITON	1
32	PACKING FOLLOWER	PTFE.+25GF	1
33	STOP PIN	SS304	1SET
35	BOLT	SS304	16
36	BOLT WASHER	SS304	16

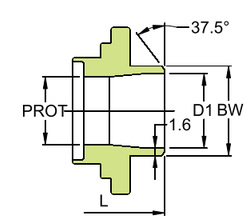

Butt weld end

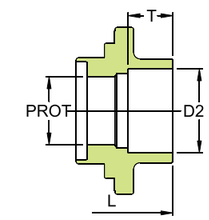

Socket weld end

DIMENSIONS

unit:mm

SIZE	PORT	L	E	H1	H	H4	D	Z1	Z2	F	ISO 5211		BW	D1	D2	T
1/2"	16.0	96.0	186.5	9.0	89.0	47.8	9.0	6.0		48.0		42 F04	21.3	15.8	21.8	10.0
3/4"	20.0	107.0	218.0	11.0	98.0	58.2	11	7.0		53.5		50 F05	26.7	20.9	27.4	13.0
1"	25.0	126.0	218.0	11.5	102.0	64.0	11	7.0		63.0		50 F05	33.4	26.6	34.1	13.0
1-1/4"	32.0	133.0	235.0	15.2	118.5	79.0	14.0	9.0	7.0	66.5	50 F05	70 F07	42.2	35.1	42.7	13.0
1-1/2"	38.0	151.0	235.0	14.3	127.0	88.5	14.0	9.0	7.0	75.5	50 F05	70 F07	48.3	40.9	49.0	13.0
2"	50.0	166.0	252.0	17.8	139.0	105.8	17.0	11.0	9.0	83.0	70 F07	102 F10	60.3	52.5	61.0	16.0
2-1/2"	65.0	175.0	302.0	17.5	165.7	117.3	17.0	11.0	9.0	87.5	70 F07	102 F10	73.0	62.7	77.0	16.0
3"	80.0	207.2	302.0	17.5	170.0	128.0	17.0	11.0	9.0	103.6	70 F07	102 F10	88.9	77.9	90.2	16.0
4"	100	285.6	600.0	30.0	308.0	159.0	27.0	14.0		142.8		125 F12	114.3	102.3	115.3	22.0

GKV-132

FULL PORT THREE-PIECE WELD WELD BALL VALVE

- THREADED END,SOCKET WELD END,BUTT WELD END
- ISO 5211 DIRECT MOUNTING PAD
- BLOW-OUT PROOF STEM
- WORKING PRESSURE(CWP) :
  DN8~DN50 1000psi
  DN65~DN80 800psi
- TEMPERATURE RANGE: -20 to 180℃
- LOCKING DEVICE
- PIPE THREAD IN ACCORDANCE
  ANSI B1.20.1(NPT)
  DIN 259/DIN 2999
  ISO 228

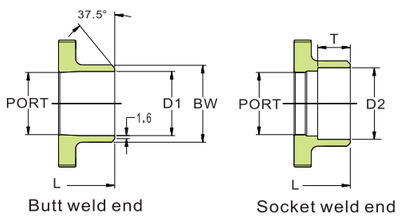

Butt weld end　　Socket weld end

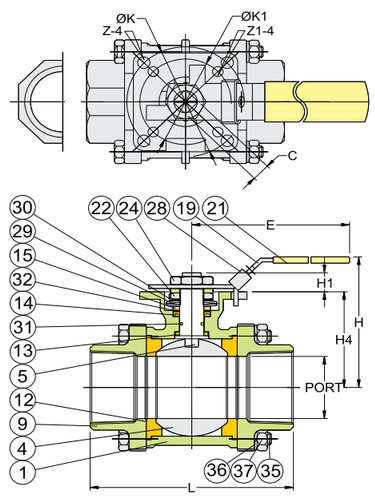

MATERIALS LIST

NO.	PART NAME	MATERIAL
1	BODY	ASTM A351 Gr.CF8M
4	BALL	ASTM A351 Gr.CF8M
5	STEM	SS316
9	END CAP	ASTM A351 Gr.CF8M
12	SEAT	RTFE.
13	THRUST WASHER	RTFE.
14	STEM PACKING	RTFE.
15	GLAND BUSH	SS304
19	HANDLE	SS304
21	HANDLE COVER	VINYL GRIP
22	STEM NUT	SS304
24	HANDLE NUT	SS304
28	LOCKING PAD	SS304
29	BELLEVILLE WASHER	SS304-CSP
30	TAB WASHER	SS304
31	O-RING	VITON
32	PACKING FOLLWER	PTFE.+25%G.F.
35	BODY BOLT	SS304
36	BOLT WASHER	SS304
37	BOLT NUT	SS304

DIMENSIONS

Unit:mm

SIZE		PORT	L	L	E	H	H1	H4	C	K	K1	Z-4	Z1-4	D1	BW	D2	T
DN8	1/4"	11.5	63.5	58.5	112.0	73.0	8.5	37.0	9.0	50.0	36.0	7.0	6.0	11.0	13.7	14.2	10.0
DN10	3/8"	12.5	63.5	63.5	112.0	73.0	8.5	37.0	9.0	50.0	36.0	7.0	6.0	12.5	17.1	17.5	10.0
DN15	1/2"	15.0	63.5	75	112.0	73.0	8.5	37.0	9.0	50.0	36.0	7.0	6.0	15.8	21.3	21.8	10.0
DN20	3/4"	20.0	72.5	80	112.0	80.8	8.5	45.0	9.0	50.0	36.0	7.0	6.0	20.9	26.7	27.4	13.0
DN25	1"	25.0	81.0	90	136.0	90.5	11.4	53.5	9.0	50.0	36.0	7.0	6.0	26.6	33.4	34.1	13.0
DN32	1-1/4"	32.0	94.5	110	185.0	98.7	11.4	59.0	9.0	50.0	36.0	7.0	6.0	35.1	42.2	42.7	13.0
DN40	1-1/2"	38.0	108.0	120	197.9	115.3	14.0	74.8	14.0	70.0	50.0	9.0	7.0	40.9	48.3	49.0	13.0
DN50	2"	50.0	121.5	140	197.9	124.0	13.7	83.5	14.0	70.0	50.0	9.0	7.0	52.5	60.3	61.0	16.0
DN65	2-1/2"	65.0	157.5	185	267.0	155.0	18.0	108.8	17.0	102.0	70.0	11.0	9.0	62.7	73.0	77.0	16.0
DN80	3"	80.0	190.0	205	267.0	208.5	18.0	118.3	17.0	102.0	70.0	11.0	9.0	77.9	88.9	90.2	16.0
DN100	4"	100.0	225.0	240	322.0	216.7	18.0	153.8	17.0	102.0	70.0	11.0	9.0	102.3	114.3	115.3	22.0

GKV-132L

FULL PORT THREE-PIECE WELD WELD BALL VALVE

- THREADED END,SOCKET WELD END,BUTT WELD END
- BLOW-OUT PROOF STEM
- WORKING PRESSURE(CWP) :
  DN8~DN50 1000psi
  DN65~DN80 800psi
- TEMPERATURE RANGE: -20 to 180℃
- LOCKING DEVICE
- FACE TO FACE: DIN 3202 M3
- WITH ISO MOUNTING FLANGE
- PIPE THREAD IN ACCORDANCE
  ANSI B1.20.1(NPT)
  DIN 259/DIN 2999

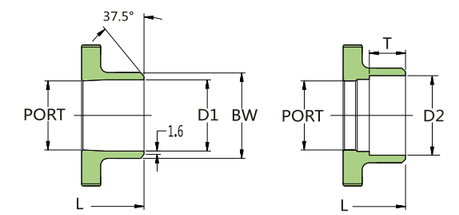

Butt weld end　　Socket weld end

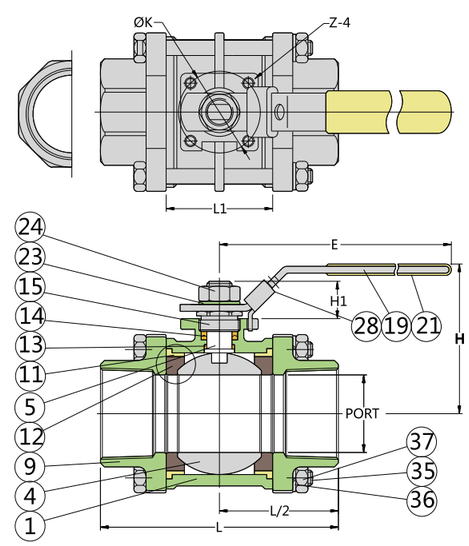

MATERIALS LIST

NO.	PART NAME	MATERIAL
1	BODY	ASTM A351 Gr.CF8M
4	BALL	ASTM A351 Gr.CF8M
5	STEM	SS316
9	END CAP	ASTM A351 Gr.CF8M
11	BODY SEAL	PTFE.
12	SEAT	RTFE.
13	THRUST WASHER	PTFE.
14	STEM PACKING	PTFE.
15	GLAND	SS304
19	HANDLE	SS304
21	HANDLE COVER	PLASTIC
23	HANDLE WASHER	SS304
24	HANDLE NUT	SS304
28	LOCKING DEVICE	SS304 (OPTION)
35	BODY BOLT	SS304
36	BOLT WASHER	SS304
37	BOLT NUT	SS304

DIMENSIONS

unit:mm

SIZE		PORT	L	E	H	H1	ØK	Z-4	L1	BW	D1	D2	T
DN8	1/4"	11.0	63.7	102.0	54.0	13.0	36.0	M5xP0.8	21.0	13.7	11.0	14.2	10.0
DN10	3/8"	12.5	63.7	102.0	54.0	13.0	36.0	M5xP0.8	21.0	17.1	12.5	17.5	10.0
DN15	1/2"	15.0	65.7	102.0	55.0	13.0	36.0	M5xP0.8	22.5	21.3	15.8	21.8	10.0
DN20	3/4"	20.0	76.2	126.0	62.0	17.0	36.0	M5xP0.8	31.0	26.7	20.9	27.4	13.0
DN25	1"	25.4	86.2	126.0.	66.0	19.0	36.0	M5xP0.8	40.0	33.4	26.6	34.1	13.0
DN32	1-1/4"	32.0	102.8	154.0	90.0	27.0	50.0	M6xP1.0	50.0	42.2	35.1	42.7	13.0
DN40	1-1/2"	40.0	119.4	154.0	93.0	26.0	50.0	M6xP1.0	58.0	48.3	40.9	49.0	13.0
DN50	2"	50.8	131.4	188.0	102.0	24.0	50.0	M6xP1.0	70.0	60.3	52.5	61.0	16.0
DN65	2-1/2"	65.0	164.0	265.0	121.0	39.0	70.0	M8xP1.25	85.0	73.0	62.7	77.0	16.0
DN80	3"	80.0	182.7	265.0	134.0	37.0	102.0	M10xP1.5	101.5	88.9	77.9	90.2	16.0
DN100	4"	100.0	236.2	272.0	175.0	50.0	102.0	M10xP1.5	122.0	114.3	102.3	115.3	22.0

GKV-133

FULL PORT THREE-PIECE WELD WELD BALL VALVE

- BLOW-OUT PROOF STEM
- FACE TO FACE· DIN 3202 S13
- WORKING PRESSURE(CWP) :
  DN8~DN50 1000psi
  DN65~DN100 800psi
- TEMPERATURE RANGE: -20 to 180℃
- LOCKING DEVIC

MATERIALS LIST

NO.	PART NAME	MATERIAL
1	BODY	ASTM A351 Gr.CF8M
4	BALL	ASTM A351 Gr.CF8M
5	STEM	SS316
9	END CAP	ASTM A351 Gr.CF8M
12	SEAT	PTFE.
13	THRUST WASHER	PTFE.
14	STEM PACKING	PTFE.
15	GLAND	SS304
19	HANDLE	SS304
21	HANDLE COVER	VINYL GRIP
23	HANDLE WASHER	SS304
24	HANDLE NUT	SS304
28	LOCKING DEVICE	SS304 (OPTION)
35	BODY BOLT	SS304
36	BOLT WASHER	SS304
37	BOLT NUT	SS304

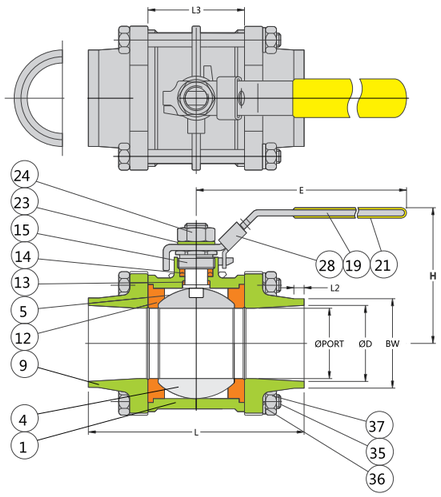

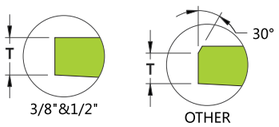

DIMENSIONS unit:mm

SIZE		PORT	L	L2	E	H	?D	T	BW	L3
DN8	1/4"	11.5	70.0	5.0	97.4	49.0	11.5	1.6	16.2	19.0
DN10	3/8"	12.5	70.0	6.0	97.4	49.0	13.6	1.8	17.2	19.0
DN15	1/2"	15.0	75.0	6.0	122.9	58.0	17.3	2.0	21.3	22.5
DN20	3/4"	20.0	90.0		122.9	61.0	20.0	1.6	27.8	27.5
DN25	1"	25.0	100.0	8.0	144.9	68.0	28.5	2.0	33.7	34.0
DN32	1-1/4"	32.0	110.0		144.9	73.5	32.0	1.6	43.7	42.5
DN40	1-1/2"	38.0	125.0	10.0	188.9	84.5	42.5	2.0	48.3	52.0
DN50	2"	50.0	150.0	10.0	188.9	93.2	53.9	2.0	60.3	63.5
DN65	2-1/2"	65.0	190.0	12.0	255.3	131.8	68.9	2.0	76.1	85.5
DN80	3"	80.0	220.0	12.0	260.8	140.0	80.9	2.0	88.9	102.0
DN100	4"	100.0	270.0	12.0	322.2	173.6	104.3	2.0	114.3	128.5

GKV-135

THREE-PIECE ISO5211 MOUNT DIRECT TYPE BALL VALVE VALVE

2000WOG/1500WOG/1000WOG

- THREADED END,SOCKET WELD END,BUTT WELD END
- ISO 5211 DIRECT MOUNTING PAD
- BLOW-OUT PROOF STEM
- WORKING PRESSURE(CWP) :
  GKV-135B DN8~DN25 2000psi PN140 bar
  GKV-135B DN32~DN50 1500psi PN100 ba
  GKV-135B DN65~DN100 1000psi PN63 bar
  GKV-135R DN8~DN32 2000psi PN140 bar
  GKV-135R DN40~DN65 1500psi PN100 bar
  GKV-135R DN80~DN100 1000psi PN63 bar
- TEMPERATURE RANGE: -20 to 180℃
- LOCKING DEVICE
- PIPE THREAD IN ACCORDANCE

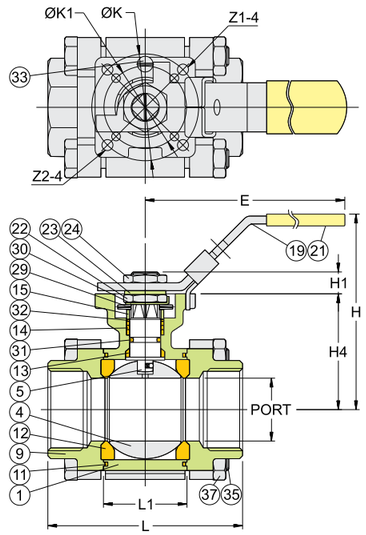

MATERIAL LIST

NO	PART NAME	MATERIAL
1	BODY	ASTM A351 Gr.CF8M
4	BALL	ASTM A351 Gr.CF8M
5	STEM	SS316
9	END CAP	ASTM A351 Gr.CF8M
11	BODY SEAL	RTFE.
12	SEAT	RTFE.
13	THRUST WASHER	RTFE.
14	STEM PACKING	SS304
15	GLAND BUSH	SS304
19	HANDLE	PLASTIC
21	HANDLE COVER	SS304
22	STEM NUT	SS304
23	HANDLE WASHER	SS304
24	HANDLE NUT	SS304
29	BELLEVILLE WASHER	SUS304 CSP
30	TAB WASHER	SS304
31	STEM O-RING	VITON
32	PACKING FOLLOWER	PTFE.+25%GF
33	STOP PIN	SS304
35	BODY BLOT	SS304
37	BOLT NUT	SS304

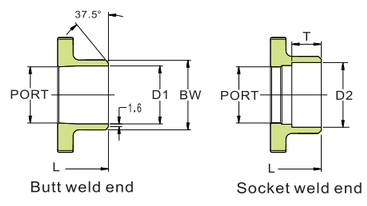

2000WOG/1500WOG/1000WOG

- THREADED END,SOCKET WELD END,BUTT WELD END
- ISO 5211 DIRECT MOUNTING PAD
- BLOW-OUT PROOF STEM
- ORKING PRESSURE(CWP) :

GKV-135B DN8~DN25 2000psi PN140 bar
GKV-135B DN32~DN50 1500psi PN100 ba
GKV-135B DN65~DN100 1000psi PN63 bar
GKV-135R DN8~DN32 2000psi PN140 bar
GKV-135R DN40~DN65 1500psi PN100 bar
GKV-135R DN80~DN100 1000psi PN63 bar

- TEMPERATURE RANGE: -20 to 180℃
- LOCKING DEVICE
- PIPE THREAD IN ACCORDANCE

ANSI B1.20.1(NPT)
DIN 259/DIN 2999
ISO 228 (G)

Full Bore Dimension

SIZE		PORT	L	E	H	H1	H4	C	ØK	ØK1	Z1-4	Z2-4	L1	BW	D1	D2	T
DN8	1/4"	11	56.1	112.0	72.9	8.5	37.0	9.0	50.0	36.0	7.0	6.0	22.5	11	11	11	11
DN10	3/8"	12.5	56.1	112.0	72.9	8.5	37.0	9.0	50.0	36.0	7.0	6.0	22.5	12.5	12.5	12.5	12.5
DN15	1/2"	15.0	68.0	112.0	72.9	8.5	37.0	9.0	50.0	36.0	7.0	6.0	22.5	15.0	15.0	15.0	15.0
DN20	3/4"	20.0	76.1	112.0	81.8	8.5	45.0	9.0	50.0	36.0	7.0	6.0	20.0	20.0	20.0	20.0	20.0
DN25	1"	25.0	84.6	136.0	90.5	11.4	53.5	9.0	50.0	36.0	7.0	6.0	25.0	25.0	25.0	25.0	25.0
DN32	1-1/4"	32.0	98.1	185.0	98.0	11.4	59.0	9.0	50.0	36.0	7.0	6.0	32.0	32.0	32.0	32.0	32.0
DN40	1-1/2"	38.0	111.2	197.9	114.7	14.0	74.8	14.0	70.0	50.0	9.0	7.0	38.0	38.0	38.0	38.0	38.0
DN50	2"	50.0	126.7	197.9	124.0	13.7	83.5	14.0	70.0	50.0	9.0	7.0	50.0	50.0	50.0	50.0	50.0

Reduced Bore Dimension

SIZE		PORT	L	E	H	H1	H4	C	ØK	ØK1	Z1-4	Z2-4	L1	BW	D1	D2	T
DN15	1/2"	15.0	68.0	112.0	72.9	8.5	37.0	9.0	50.0	36.0	7.0	6.0	22.5	15.0	15.0	15.0	15.0
DN20	3/4"	20.0	76.1	112.0	81.8	8.5	45.0	9.0	50.0	36.0	7.0	6.0	20.0	20.0	20.0	20.0	20.0
DN25	1"	25.0	84.6	136.0	90.5	11.4	53.5	9.0	50.0	36.0	7.0	6.0	25.0	25.0	25.0	25.0	25.0
DN32	1-1/4"	32.0	98.1	185.0	98.0	11.4	59.0	9.0	50.0	36.0	7.0	6.0	32.0	32.0	32.0	32.0	32.0
DN40	1-1/2"	38.0	111.2	197.9	114.7	14.0	74.8	14.0	70.0	50.0	9.0	7.0	38.0	38.0	38.0	38.0	38.0
DN50	2"	50.0	126.7	197.9	124.0	13.7	83.5	14.0	70.0	50.0	9.0	7.0	50.0	50.0	50.0	50.0	50.0

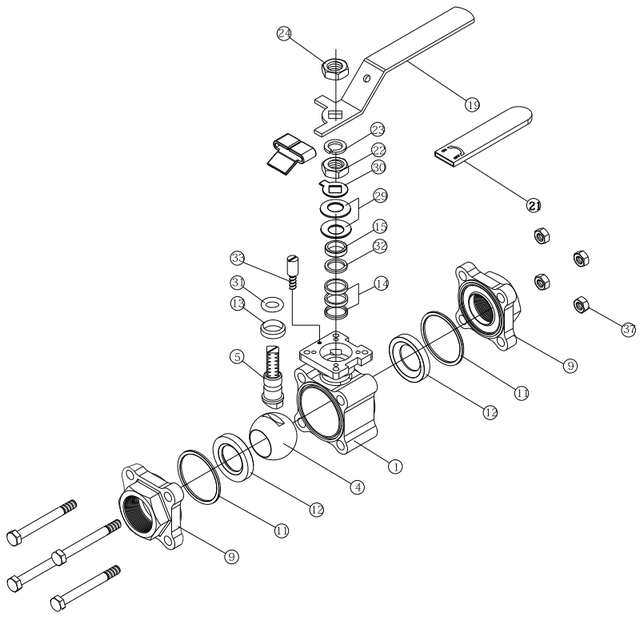

- THREADED END,SOCKET WELD END,BUTT WELD END
- WITH ISO 5211 DIRECT MOUNTING PAD
- BLOW-OUT PROOF STEM
- WORKING PRESSURE(CWP) :

GKV-135B DN65~DN100 1000psi PN63 bar
GKV-135R DN80~DN100 1000psi PN63 bar

- TEMPERATURE RANGE: -20 to 180℃
- LOCKING DEVICE
- PIPE THREAD IN ACCORDANCE

ANSI B1.20.1(NPT)
DIN 259/DIN 2999
ISO 228（G）
BSPT（PT）
BSP（PF）

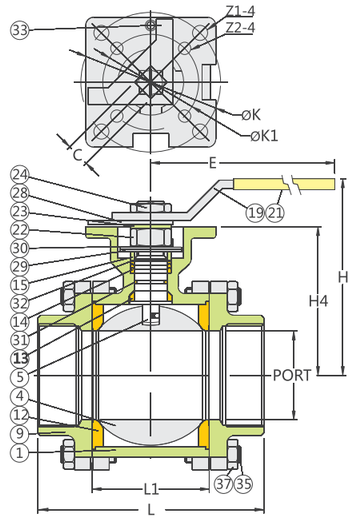

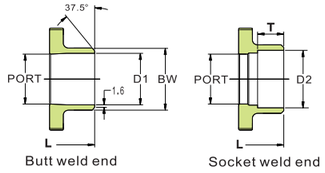

MATERIAL LIST

NO	PART NAME	MATERIAL
1	BODY	ASTM A351 Gr.CF8M
4	BALL	ASTM A351 Gr.CF8M
5	STEM	SS316
9	END CAP	ASTM A351 Gr.CF8M
11	BODY SEAL	RTFE.
12	SEAT	RTFE.
13	THRUST WASHER	RTFE.
14	STEM PACKING	SS304
15	GLAND BUSH	SS304
19	HANDLE	PLASTIC
21	HANDLE COVER	SS304
22	STEM NUT	SS304
23	HANDLE WASHER	SS304
24	HANDLE NUT	SS304
29	BELLEVILLE WASHER	SUS304 CSP
30	TAB WASHER	SS304
31	STEM O-RING	VITON
32	PACKING FOLLOWER	PTFE.+25%GF
33	STOP PIN	SS304
35	BODY BLOT	SS304
37	BOLT NUT	SS304

Full Bore Dimension

unit:mm

SIZE		PORT	L	E	H	H1	H4	C	ØK	ØK1	Z1-4	Z2-4	L1	BW	D1	D2	T
DN 65	2-1/2"	65.0	165.0	267.0	155.0	18.0	108.8	17.0	102.0	70.0	11.0	9.0	85.5	73.0	62.7	77.0	16.0
DN 80	3"	80.0	208.0	267.0	208.5	18.0	118.3	17.0	102.0	70.0	11.0	9.0	102.0	88.9	77.9	90.2	16.0
DN 100	4"	100.0	232.5	322.0	216.7	18.0	153.8	17.0	102.0	70.0	11.0	9.0	128.5	114.3	102.3	115.3	20.0

Reduced Bore Dimension

SIZE		PORT	L	E	H	H1	H4	C	ØK	ØK1	Z1-4	Z2-4	L1	BW	D1	D2	T
DN 80	3"	80.0	208.0	267.0	208.5	18.0	118.3	17.0	102.0	70.0	11.0	9.0	102.0	88.9	77.9	90.2	16.0
DN 100	4"	100.0	232.5	322.0	216.7	18.0	153.8	17.0	102.0	70.0	11.0	9.0	128.5	114.3	102.3	115.3	20.0

GKV-136

THREE-PIECE MOUNT DIRECT CLAMP END BALL VALVE

- ISO 5211 DIRECT MOUNTING PAD
- BLOW-OUT PROOF STEM
- T-CLAMP END
- WORKING PRESSURE(CWP) :
  DN8~DN50 1000psi
  DN65~DN80 800psi
- TEMPERATURE RANGE: -20 to 180℃
- LOCKING DEVICE

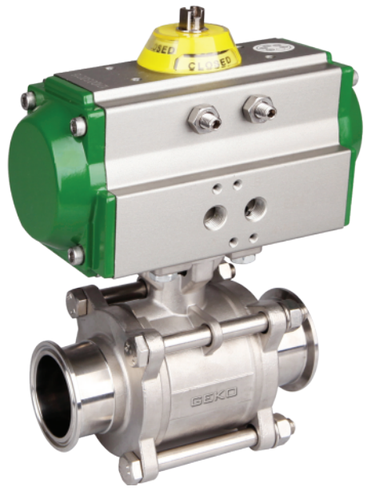

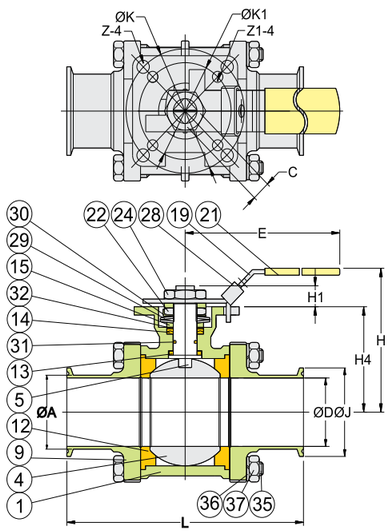

MATERIALS LIST

NO.	PART NAME	MATERIAL
1	BODY	ASTM A351 Gr.CF8M
4	BALL	SS316
5	STEM	SS316
9	END CAP	ASTM A351 Gr.CF8M
12	SEAT	RTFE.
13	THRUST WASHER	RTFE.
14	STEM PACKING	RTFE.
15	GLAND BUSH	SS304
19	HANDLE	SS304
21	HANDLE COVER	VINYL GRIP
22	STEM NUT	SS304
24	HANDLE NUT	SS304
28	LOCKING PAD	SS304
29	BELLEVILLE WASHER	SS304-CSP
30	TAB WASHER	SS304
31	O-RING	VITON
32	PACKING FOLLWER	PTFE.+25%G.F.
35	BODY BOLT	SS304
36	BOLT WASHER	SS304
37	BOLT NUT	SS304

DIMENSIONS

Unit:mm

SIZE		A	L	E	H	H1	H4	C	K	K1	Z-4	Z1-4	D	J
DN15	1/2"	20.2	112.0	112.0	73.0	8.5	37.0	9.0	50.0	36.0	7.0	6.0	9.4	25.4
DN20	3/4"	20.2	112.0	112.0	80.8	8.5	45.0	9.0	50.0	36.0	7.0	6.0	15.75	25.4
DN25	1"	43.6	136.0	136.0	90.5	9.5	53.5	9.0	50.0	36.0	7.0	6.0	22.2	50.4
DN40	1-1/2"	43.6	197.0	197.9	115.3	9.5	74.8	14.0	70.0	50.0	9.0	7.0	34.9	50.4
DN50	2"	56.3	197.0	197.9	124.0	13.7	83.5	14.0	70.0	50.0	9.0	7.0	47.5	63.5
DN65	2-1/2"	70.6	264.0	264.0	155.0	18.0	108.8	17.0	102.0	70.0	11.0	9.0	60.3	77.5
DN80	3"	83.3	264.0	264.0	164.5	18.0	118.3	17.0	102.0	70.0	11.0	9.0	73.0	90.9
DN100	4"	110.3	325.0	325.0	216.7	18.0	153.8	17.0	102.0	70.0	11.0	9.0	97.4	118.9

GKV-137

FULL PORT THREE-PIECE WELD WELD BALL VALVE

- BLOW-OUT PROOF STEM
- WORKING PRESSURE(CWP) :
  DN8~DN50 1000psi
  DN65~DN100 800psi
- TEMPERATURE RANGE: -20 to 180℃
- FULLED CAVITY PTFE SEAT
- LOCKING DEVIC

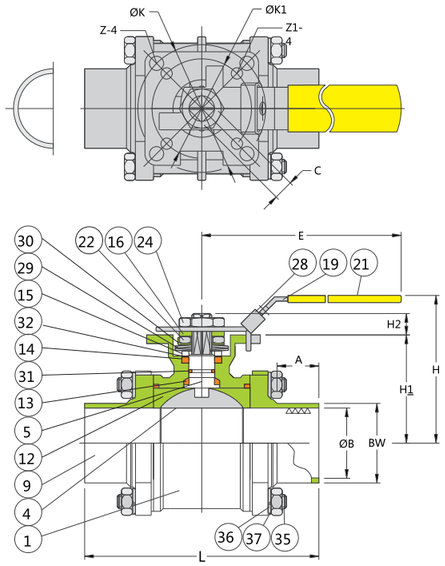

MATERIALS LIST

NO.	PART NAME	MATERIAL
1	BODY	ASTM A351 Gr.CF8M
4	BALL	ASTM A351 Gr.CF8M
5	STEM	Ss316
9	END CAP	ASTM A351 Gr.CF8M
12	SEAT	PTFE/TFM1600.
13	THRUST WASHER	PTFE.
14	STEM PACKING	PTFE.
15	GLAND BUSH	SS304
16	HANDLE GLAND	SS304
19	HANDLE	SS304
21	HANDLE COVER	VINYL GRIP
22	STEM NUT	SS304
24	HANDLE NUT	SS304
28	LOCKING PAD	SS304(OPTION)
29	BELLEVILLE WASHER	SS304-CSP
30	TAB WASHER	SS304
31	O-RING	VITON
32	PACKING FOLLWER	RTFE
35	BODY BOLT	SS304
36	BOLT WASHER	SS304
37	BOLT NUT	SS304

DIMENSIONS

unit:mm

SIZE		A	L	E	H	H1	H2	C	ØK	ØK1	Z-4	Z1-4	BW	ØB
DN15	1/2"	20.0	82.5	112.0	73.0	37.0	8.5	9.0	50.0	36.0	7.0	6.0	12.7	10.2
DN20	3/4"	20.0	87.5	112.0	80.8	45.0	8.5	9.0	50.0	36.0	7.0	6.0	19.1	15.8
DN25	1"	20.0	96.0	136.0	90.5	53.5	9.5	9.0	50.0	36.0	7.0	6.0	25.4	22.1
DN40	1-1/2"	20.0	118.0	197.9	115.3	74.8	14.0	14.0	70.0	50.0	9.0	7.0	38.2	34.8
DN50	2"	20.0	131.7	197.9	124.0	83.5	13.7	14.0	70.0	50.0	9.0	7.0	50.8	47.5
DN65	2-1/2"	20.0	158.5	267.0	155.0	108.8	18.0	17.0	102.0	70.0	11.0	9.0	63.4	60.2
DN80	3"	20.0	178.8	267.0	208.5	118.3	18.0	17.0	102.0	70.0	11.0	9.0	76.2	72.9
DN100	4"	20.0	210.5	322.0	216.7	153.8	18.0	17.0	102.0	70.0	11.0	9.0	101.6	97.4

GKV-138

THREE-PIECE COMPRESSION ENDS BALL VALVE

Instrumentation Ball Valve

- BLOW-OUT PROOF STEM
- WORKING PRESSURE(CWP) :1000psi
- TEMPERATURE RANGE: -20 to 180℃
- LOCKING DEVIC

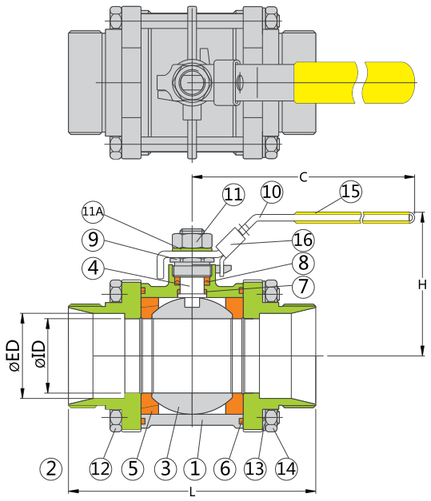

MATERIALS LIST

ITEM	PART NAME	MATERIAL
1	BODY	CF8M
2	END CAP (LOK)	CF3M/CF8M
3	BALL	CF8M
4	SEAM	SS316
5	SEAT	TFM1600/PTFE
6	BODY SEAL	PTFE.TEFLON
7	THRUST WASHER	PTFE.TEFLON
8	STEM PACKING	PTFE.TEFLON
9	STEM NUT	SS304
10	HANDLE	SS304
11	HANDLE NUT	SS304
11A	HANDLE WASHER	SS304
12	BODY BOLT	SS304
13	BOLT WASHER	SS304
14	BOLT NUT	SS304
15	HANDLE SLEEVE	VINYL
16	LOCKING DEICE	SS304

DIMENSIONS unit:mm

SIZE	ØID	ØED	L	C	H
1/4"	4.6	6.49	65.4	103.0	53.0
3/8"	7.5	9.7	65.4	103.0	53.0
1/2"	10.2	12.9	72.2	103.0	58.0
3/4"R	15.0	19.2	76.2	103.0	58.0
1"R	20.0	25.55	85.4	128.0	63.0

GKV-128

FULL PORE TWO-PIECE BALL VALVE SCREWED END

GKV-128 3000WOG 6000WOG

- BLOW-OUT PROOF STEM
- WORKING PRESSURE(CWP):DN8~DN50 3000psi/6000psi
- TEMPERATURE RANGE: -20 to 180℃
- LOCKING DEVICE
- PIPE THREAD IN ACCORDANCE
  - ANSI B1.20.1(NPT)
  - DIN 259/DIN 2999
  - ISO 228
  - BSP
  - PT

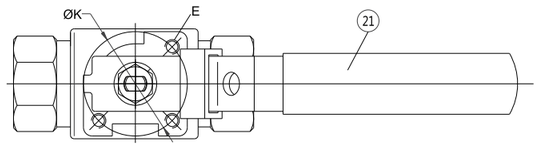

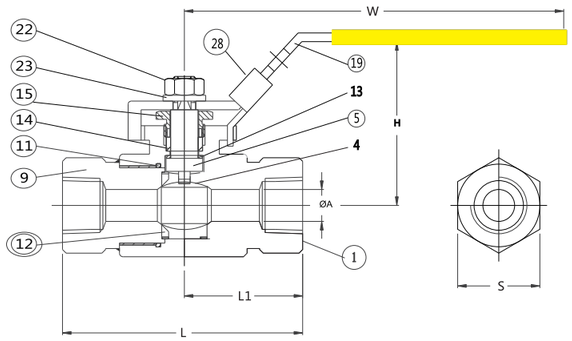

DIMENSION(M.M.)

SIZE	DN	A	D	L	L1	H	W	S 3000WOG	S 6000WOG	E
1/4"	8	6.3	36	76	38.0	52	132.5	31.8		1/4"-20UNC
3/8"	10	9.6	36	76	38.0	52	132.5	31.8		1/4"-20UNC
1/2"	15	12.7	36	101	50.0	53	132.5	31.8		1/4"-20UNC
3/4"	20	19.0	42	108	54.0	68.5	150	46.1		1/4"-20UNC
1"	25	25.0	42	115	57.0	70.5	150	57.2		1/4"-20UNC
1-1/4"	32	31.5	50	121	60.5	84	182	67.8		1/4"-20UNC
1-1/2"	40	37.0	50	134	67.0	88.6	182	76.2	88.9	1/4"-20UNC
2"	50	37.0	50	158	79.0	90	182	76.2	88.9	1/4"-20UNC

1/4"~1-1/2" Full bore, 2" Reduced bore

MATERIAL LIST

PART	DESCRIPTION	MATERIAL
1	BODY	ASTM A351 Gr.CF8M
9	END CAP	ASTM A351 Gr.CF8M
4	BALL	ASTM A351 Gr.CF8M
5	STEM	SS 316
11	BODY SEAL	PEEK
12	SEAT	DELRIN
13	THRUST WASHER	PEEK
14	STEM PACKING	PEEK
15	GLAND	SS 316
19	HANDLE	SS 304
21	HANDLE COVER	PLASTIC
22	HANDLE NUT	SS 304
23	WASHER	SS 304
28	LOCKING PAD	SS 316

GKV-125

FULL PORT TWO-PIECE BALL VALVE SCREWED END

- ISO 5211 DIRECT MOUNTING PAD
- BLOW-OUT PROOF STEM
- WORKING PRESSURE(CWP) :DN8~DN50 1000psi
- TEMPERATURE RANGE: -20 to 180℃
- LOCKING DEVICE
- PIPE THREAD IN ACCORDANCE
  - ANSI B1.20.1(NPT)
  - DIN 259/DIN 2999
  - ISO 228
  - BSP
  - PT

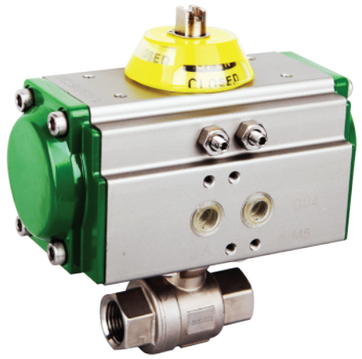

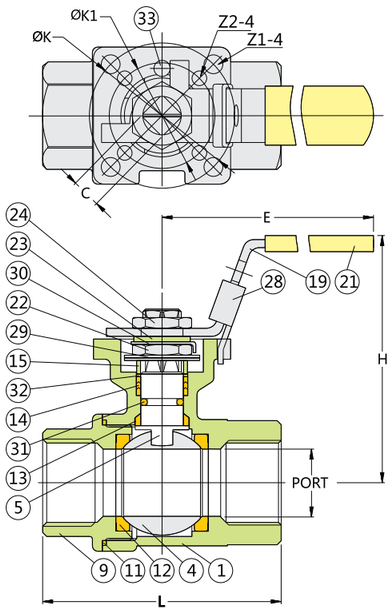

MATERIAL LIST

NO.	PART NAME	MATERIAL
1	BODY	ASTM A351 Gr.CF8M
4	BALL	ASTM A351 Gr.CF8M
5	STEM	SS316
9	END CAP	ASTM A351 Gr.CF8M
11	BODY SEAL	PTFE.
12	SEAT	PTFE.
13	THRUST WASHER	PTFE.
14	STEM PACKING	PTFE.
15	GLAND BUSH	SS304
19	HANDLE	SS304
21	HANDLE COVER	PLASTIC
22	STEM NUT	SS304
23	HANDLE WAHSER	SS304
24	HANDLE NUT	SS304
28	LOCKING DEVICE	SS304(OPTION)
29	BELLEVILLE WASHER	SUS304-CSP
30	TAB WASHER	SS304
31	STEM O-RING	VITON
32	PACKING FOLLOWER	PTFE.+25GGF
33	STOP PIN	SS304

DIMENSIONS

unit:mm

SIZE		PORT	L	E	H	C	ØK	ØK1	Z1-4	Z2-4
DN8	1/4"	11.5	65.3	112.0	72.9	9.0	50.0	36.0	7.0	6.0
DN10	3/8"	12.5	65.3	112.0	72.9	9.0	50.0	36.0	7.0	6.0
DN15	1/2"	15.0	65.3	112.0	72.9	9.0	50.0	36.0	7.0	6.0
DN20	3/4"	20.0	77.3	112.0	81.8	9.0	50.0	36.0	7.0	6.0
DN25	1"	25.0	88.7	136.0	90.5	9.0	50.0	36.0	7.0	6.0
DN32	1-1/4"	32.0	102.4	185.0	98.0	9.0	50.0	36.0	7.0	6.0
DN40	1-1/2"	38.0	109.0	197.9	114.7	14.0	70.0	50.0	9.0	7.0
DN50	2"	50.0	125.3	197.9	124.0	14.0	70.0	50.0	9.0	7.0

GKV-125L

FULL PORE TWO-PIECE BALL VALVE SCREWED END

- BLOW-OUT PROOF STEM
- WORKING PRESSURE(CWP):DN8~DN50 1000psi
  DN65~DN80 800psi
- TEMPERATURE RANGE: -20 to 180℃
- LOCKING DEVICE
- FACE TO FACE: DIN 3202 M3
- PIPE THREAD IN ACCORDANCE
  - ANSI B1.20.1(NPT)
  - DIN 259/DIN 2999
  - ISO 228
  - BSP
  - PT

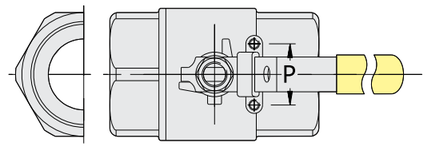

MATERIAL LIST

NO.	PART NAME	MATERIAL
1	BODY	ASTM A351 Gr.CF8M
4	BALL	ASTM A351 Gr.CF8M
5	STEM	SS316
9	END CAP	ASTM A351 Gr.CF8M
11	BODY SEAL	PTFE.
12	SEAT	RTFE.
13	THRUST WASHER	PTFE.
14	STEM PACKING	PTFE.
16	GLAND NUT	SS304
19	HANDLE	SS304
21	HANDLE COVER	PLASTIC
24	HANDLE NUT	SS304
27	HANDLE WASHER	SS304
28	LOCKING DEVICE	SS304(OPTION)

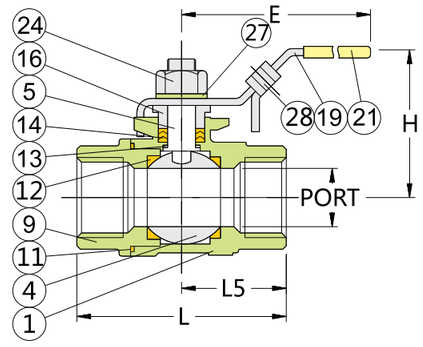

DIMENSIONS

unit:mm

SIZE		PORT	L(M3)	L	L5	E	H	P
DN8	1/4"	11.5	60.0	54.4	28.2	97.4	50.0	28.5
DN10	3/8"	12.5	60.0	54.4	28.2	97.4	50.0	28.5
DN15	1/2"	15.0	75.0	65.3	35.7	123.0	58.8	28.5
DN20	3/4"	20.0	80.0	77.3	40.2	123.0	62.5	35.0
DN25	1"	25.0	90.0	88.7	45.0	145.0	69.3	35.0
DN32	1-1/4"	32.0	110.0	102.4	53.4	145.0	76.0	38.0
DN40	1-1/2"	38.0	120.0	109.0	60.0	189.0	86.9	38.0
DN50	2"	50.0	140.0	125.3	69.5	189.0	95.0	38.0
DN65	2-1/2"	65.0	185.0	165	91.5	255.0	131.3	55.0
DN80	3"	80.0	205.0	189.5	102.7	261.0	140.6	55.0

GKV-126

TWO-PIECE BALL VALVE MALE END (FULL PORT/REDUCED PORT)

- BLOW-OUT PROOF STEM
- WORKING PRESSURE(CWP) :DN8~DN50 1000psi
- TEMPERATURE RANGE: -20 to 180℃
- END CONNECTIONS:MALE END
- LOCKING DEVICE
- PIPE THREAD IN ACCORDANCE
  ANSI B1.20.1(NPT)
  DIN 259/DIN 2999
  ISO 228
  BSP
  PT

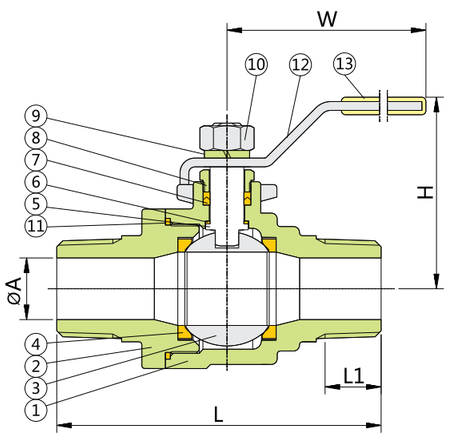

MATERIAL LIST

NO.	PART NAME	MATERIAL	QTY
1	BODY	1.4408	1
2	END CAP	1.4408	1
3	BALL	CF8M	1
4	SEAT	PTFE	2
5	STEM	SS316	1
6	THRUST WASHER	PTFE.	1
7	STEM PACKING	PTFE.	1
8	GLAND NUT	SS304	1
9	HANDLE WASHER	SS304	1
10	HANDLE NUT	SS304	1
11	BODY SEAL	PTFE	1
12	HANDLE	SS304	1
13	HANDLE COVER	PLASTIC	1
14	LOCKING DEVICE	SS304	1

DIMENSIONS

unit:mm

SIZE	DN	ØA R	ØA B	L	L1	H	L1
1/4"	8	8.5	8.5	69	12	50.0	104
3/8"	10	9.0	9.0	71	12	50.0	104
1/2"	15	11.6	15.0	79	15	56.5	123
3/4"	20	14.5	20.0	94	18	60.5	123
1"	25	20.0	25.0	106	20	69.3	145
1-1/4"	32	25.0	32.0	122	22	76.0	145
1-1/2"	40	32.0	38.0	142	25	84.5	189
2"	50	38.0	50.0	168	28	95.0	189

ØAR: Reduced bore
ØAB: Full bore

GKV-111

ONE-PIECE BALL VALVE SCREWED END

- BLOW-OUT PROOF STEM
- WORKING PRESSURE(CWP) :
  DN8~DN50 1000psi (PN 63bar)
- TEMPERATURE RANGE: -20 to 180℃
- PIPE THREAD IN ACCORDANCE
  ANSI B1.20.1(NPT)
  DIN 259/DIN 2999
  ISO 228
  BSP
  PT

MATERIALS LIST

NO	PART	MATERIAL	Q.TY
1	BODY	SUS 316	1
2	CAP	SUS 316	1
3	BALL	SUS 316	1
4	SEAP	PTFE	1
5	THRUST WASHER	PTFE	1
6	STEM	SUS 316	1
7	O RING	VTTON	2

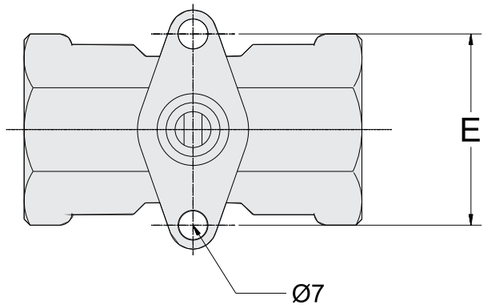

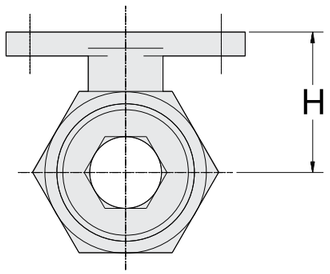

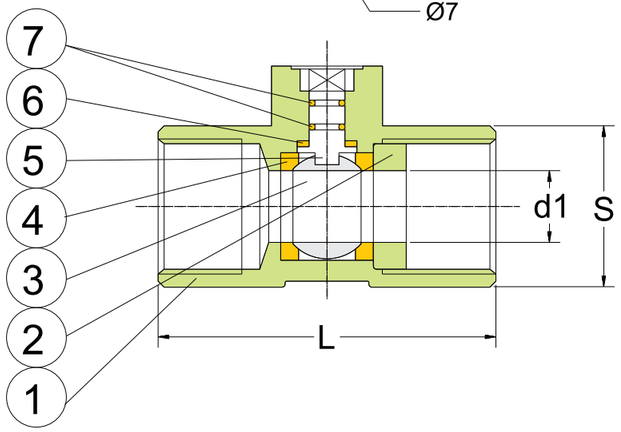

DIMENSIONS

unit:mm

SIZE	d1	L	H	E	S
1/4"	5.0	39.0	26.0	38.5	17
3/8"	7.2	44.0	27.0	38.5	19
1/2"	9.2	56.5	26.5	38.5	25
3/4"	12.5	59.0	28.5	38.5	32
1"	15.0	71.0	32.5	38.5	38
1-1/4"	20.0	78.0	36.0	38.5	49
1-1/2"	25.0	83.0	41.5	38.5	53
2"	32.0	100	47.0	38.5	64

GEKO CONTROL-VALVES

GKV-152

Y-STRAINER CLASS 600 SCREWED END

- END CONNECTIONS:THREADED END
- ORKING PRESSURE(CWP): 600WOG
- TEMPERATURE RANGE: -20 to 180℃
- PIPE THREAD IN ACCORDANCE
  - ANSI B1.20.1(NPT)
  - DIN 259/DIN 2999
  - ISO 228（G）
  - BSPT（PT）
  - BSP（PF）

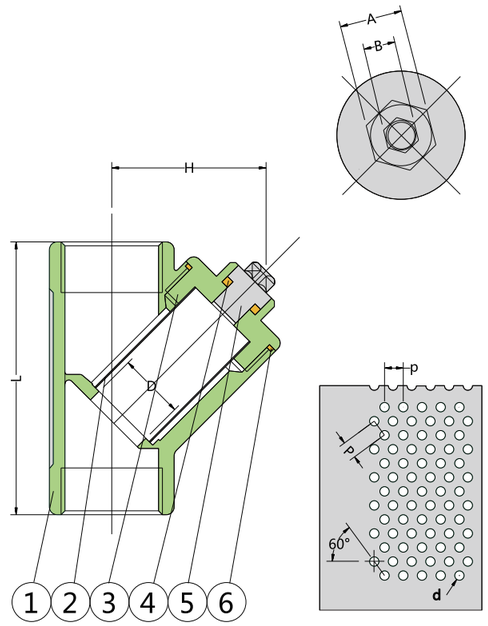

MATERIALS LIST

NO	PART	Q.TY	MATERIAL
1	BODY	1	316/304
2	SCREEN	1	316/304
3	BONNET	1	316/304
4	PACKING	1	PTFE
5	PLUG	1	316/304
6	GASKET	1	PTFE

DIMENSIONS

unit:mm

SIZE	L	H	D	p	d	A	B
1/4"	57.0	35.0	10.0	2.0	1.0	16.0	8.0
3/8"	57.0	35.0	10.0	2.0	1.0	16.0	8.0
1/2"	61.0	38.0	15.0	2.0.	1.0	16.0	8.0
3/4"	70.0	42.0	20.0	2.0	1.0	16.0	8.0
1"	86.0	50.0	25.0	2.0	1.0	20.7	10.0
1-1/4"	99.0	55.0	32.0	2.0	1.0	25.0	12.0
1-1/2"	111.0	59.0	38.0	2.0	1.0	25.0	12.0
2"	137.0	73.0	51.0	2.0	1.0	32.0	12.0
2-1/2	172.0	91.0	65.0	2.0	1.0	38.0	15.0
3"	205.0	110.0	80.0	2.0	1.0	38.0	15.0

GEKO CONTROL-VALVES

GKV-153

FULL PORT TWO-PIECE CHECK VALVE

GKV-153 DN8~DN100（1/4″ ~4″）
FULL PORT THREE-PIECE SHECK VALVE

- TEMPERATURE RANGE: -20 to 180℃
- END CONNECTIONS:
  THREADED END,SOCKET WELD END,BUTT WELD END
- PIPE THREAD IN ACCORDANCE
  - ANSI B1.20.1(NPT)
  - DIN 259/DIN 2999
  - ISO 228
  - BSPT(PT)
  - BSP(PF)

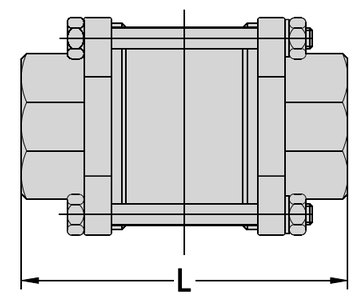

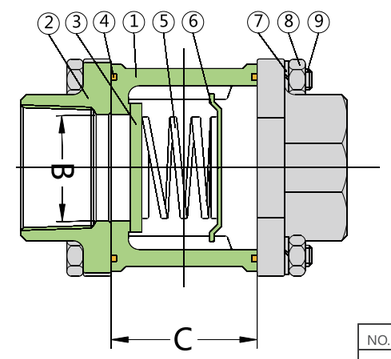

DIMENSIONS

unit:mm

MM	IN	Ø B	L	C
8	1/4"	10.0	49	14.0
10	3/8"	10.0	49	14.0
15.0	1/2"	14.0	65	18.0
20.0	3/4"	18.1	70	22.0
25.0	1"	24.2	78	27.5
32.0	11/4"	30.2	96	32.0
40.0	11/2"	36.2	102	37.0
50.0	2"	48.3	118	47.0
65.0	21/2"	63.0	145	47.0
80.0	3"	76.0	156	55.0
100	4"	98.0	181.5	70.0

MATERIALS LIST

NO.	PART NAME	STAINLESS STEEL
1	BODY	ASTM A351 CF8M
2	END CAP	ASTM A351 CF8M
3	DISC	SS 316
4	BODY SEAL	PTFE
5	SPRING	300 SERIES ST. ST.
6	SPRING HOLDER	SS 316
7	WASHER	SS 304
8	NUT	SS 304
9	BOLT	SS 304

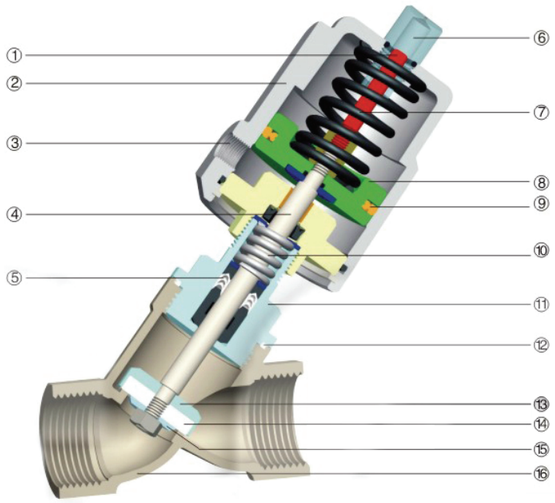

① Indication Rod(nylon)
② Actuator(CF8)
③ Pilot Port(1/8")
④ Stem（AIS1316／304)
⑤ Stem Seal（PTFE)
⑥ Cap（PC)
⑦ Spring(Steel 65Mn)
⑧ Piston(Alu.alloy)
⑨ Piston Seal(Viton)
⑩ Seal Spring(AISI304)
⑪ Connecting Piece（CF8M／CF8)
⑫ Body Seal（PTFE)
⑬ Valve core（CF8M／CF8)
⑭ Seat（PTFE)
⑮ Gasket(AIS1316／304)
⑯ Body(CF8M／CF8)

Function Principle

Valve is close(open) with spring force,when the piston is actuated by compressed air,vavle is open(closed).Forthe double acting type,the vavle isopen and close by compressed air.

Applications

- Beer & Drinks Filling Machinery
- Textile Printing & Dyeing
- Gas Industry
- Pharmacy & Medical Equipment
- Chemical Industry
- Disinfection
- Frothing Equipment
- Water／SewageDisposal

Advantages

- Large Flux,low Resistance,NoWater- hammer
- Y-type Shape Enlarged The Flowing section, which Could Raise The Flux By 30%And Make Flow More Smooth.
- Super Long Life
- Which Help The Stem Adjust And Lubricate Itself Automatically.
- The Cylinder Materialls Stainless Steel. lubricating Automatically. 360° Rolling Freely.

Technical Data

Fluid Pressure	Max1.6MPa(232psi)
Control Pressure	0.3-0.8MPa(43.5-116psi)
Control Fluid	Neutral gas,Air
Body Material	CF8M/CF8
Seals Material	PTFE
Actuator Size	CF8
Actuator Size	40mm,50mm,63mm,90mm,125mm
Applicabliscosity	Water,Alcohol,Oil,Fuel,Steam,Neutral gas or liquid,Organic solvent,Acid and lye
Fluid Viscosity	Max 600mm2／s
Fluid Temperature	-10° C~ +180° C, 25° C~ +220° C
Ambient Temperature	-10° C~ +80° C
ControlType	Normally closed,Normally open,Double acting
Connection	Threaded(BSP,BSPT,NPT),Welded,Flanged,Tri-clamp

GEKO CONTROL-VALVES
GKA SERIES PNEUMATIC ANGLE SEAT VALVE

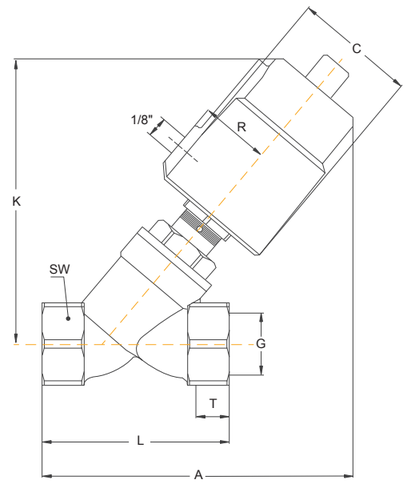

Threaded Connection

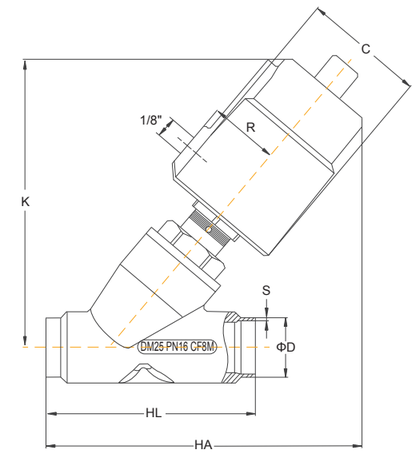

Welded Connection

Dimensions

size	actuator (mm)	C	R	K	threaded connection					welded connection									
					G	T	A	L	SW	HA	HL	DIN11850-2		DIN11850-3		SMS3008			
												D	S	D	S	HA	HL	D	S
DN10	40	50.5	27	112	3/8"	12	124	68	27	–	–	–	–	–	–	–	–	–	–
	50	60	33	125			135			–	–	–	–	–	–	–	–	–	–
DN15	40	50.5	27	112	1/2"	15	124	68	27	118	70	19	1.5	20	2	127	75	18	1
	50	60	33	125			135			128						138			
DN20	50	60	33	132	3/4"	16	140	75	32	135	82	23	1.5	24	2	145	95	25	1.2
DN25	50	60	33	136	1"	17	150	90	40	150	100	29	1.5	30	2	136	130	32	1.2
	63	75	41	162			172			175						162			
	90AL	112	57	210			215			216						210			
	90	106	55	211			216			218						211			
DN32	63	75	41	174	11/4"	21	190	116	50	186	125	35	1.5	36	2	174	145	33.7	1.2
	90AL	112	57	220			230			230						220			
	90	106	55	223			235			232						223			
DN40	63	75	41	175	11/2	21	190	116	56	190	130	41	1.5	42	2	210	160	38	1.2
	90AL	112	57	220			230			232						252			
	90	106	55	223			235			235						255			
DN50	63	75	41	183	2"	22	205	138	69	206	155	53	1.5	54	2	224	175	51	1.2
	90AL	112	57	232			245			247						263			
	90	106	55	232			250			250						265			
	125AL	148	74	287			294			250						265			
DN65	90AL	112	57	262	21/2"	26	282	178	85	–	–	–	–	–	–	–	–	–	–
	90	106	55	265			285	178		–	–	–	–	–	–	–	–	–	–
	125AL	148	74	302			320	178		–	–	–	–	–	–	–	–	–	–
DN80	125AL	148	74	313	3"	27	372	210	100	–	–	–	–	–	–	–	–	–	–

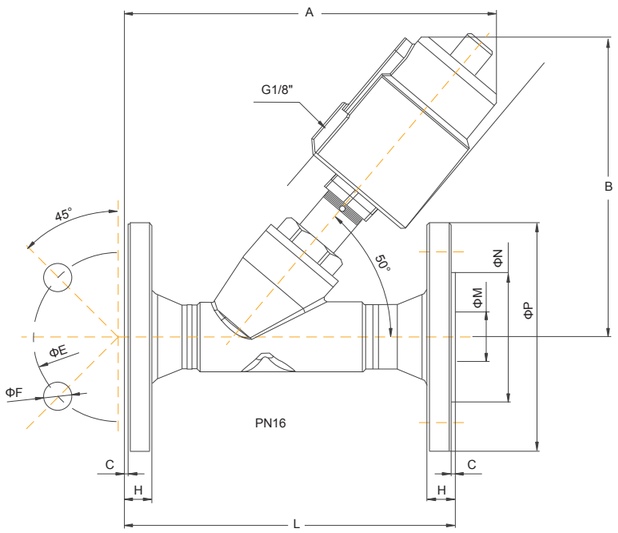

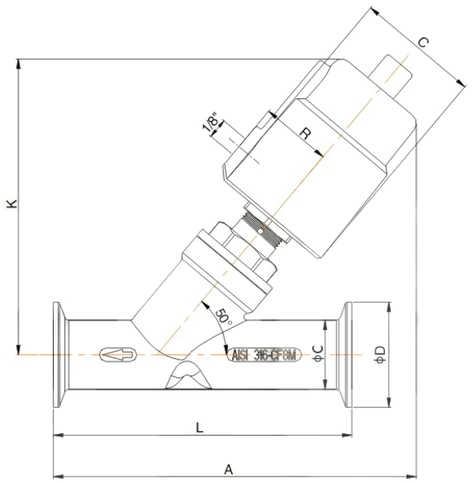

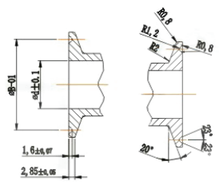

Flange specifcation:JB/T82.1-1994;ISO/DIN/JIS is also available

Clamp specifcation:ISO 2852-1993, According to customer's requirements.

Dimensions

size	actuator (mm)	A	B	L	C	H	E	F	M	N	P
DN15	50	160	125	150	2	14	65	4-φ14	16	45	95
DN20	50	165	132	160	2	14	75	4-φ14	20	56	105
DN25	50	165	136	160	2	14	85	4-φ14	25	65	115
	63	185	162								
DN32	63	200	175	160	2	16	100	4-φ18	32	78	140
	90	245	223								
DN40	63	202	175	200	3	16	110	4-φ18	36	84	150
	90	246	223								
DN50	63	222	183	230	3	16	125	4-φ18	49	100	165
	90	266	232								
	125	315	287								
DN65	90	340	265	290	3	18	145	4-φ18	66	120	185
	125	375	302								
DN80	125	387	313	310/380	3	20	160	8-φ18	78	135	200
DN100	125	410	382	350	3	20	180	8-φ18	96	155	215

Dimensions

size	actuator (mm)	D	B	C	d	L	A	K
DN15	50	34	27.5	19	15	80	140	126
DN20	50	50.5	43.5	25	21	102	148	126
DN25	50	50.5	43.5	32	27	130	165	140
	63						188	166
DN32	63	50.5	43.5	37	31	146	200	174
	90						245	223
DN40	63	64	56.5	40	33	160	210	175
	90						255	223
DN50	63	64	56.5	53	45	175	221	185
	90						265	235

△Pressure Data Sheeet

Single Acting,Normally Closed					(NC)-Enter Above Seat Single for condensable media,such as air,steam as air,steam;and low pressure liquid media.		(NC)-Enter Below Seat (NO Water-hammer) Flow come from below seat,avoid water hammer	
size	Thread end	Orifice(mm)	Kv(m3/h)	Actuator(mm)	△P(MPa)	Control pressure(MPa)	△P(MPa)	Control pressure(MPa)
DN10	G3/8 "	13	5.2	40	0-1.6	0.3-0.45	0-1.6	0.3-0.45
				50	0-1.6	0.3-0.35	0-1.6	0.3-0.35
DN15	G1/2 "	13	6.3	40	0-1.6	0.3-0.45	0-1.6	0.3-0.45
				50	0-1.6	0.3-0.35	0-1.6	0.3-0.35
DN20	G3/4 "	18	11.5	50	0-1.6	0.3-0.4	0-1.6	0.3-0.4
DN25	G1 "	24	20.6	50	0-1.6	0.3-0.45	0-1.6	0.3-0.45
				63	0-1.6	0.3-0.35	0-1.6	0.3-0.35
				90	0-1.6	0.2-0.25	0-1.6	0.2-0.25
DN32	G1 1/4 "	31	30.3	63	0-1.6	0.3-0.55	0-1.6	0.3-0.55
				90	0-1.6	0.2-0.35	0-1.6	0.2-0.35
DN40	G1 1/2 "	35	42.3	63	0-1.6	0.3-0.65	0-1.6	0.3-0.65
				90	0-1.6	0.2-0.4	0-1.6	0.2-0.4
DN50	G2 "	45	60.7	63	0-0.9	0.3-0.7	0-0.9	0.3-0.7
				90	0-1.6	0.25-0.45	0-1.6	0.25-0.45
				125	0-1.6	0.2-0.3	0-1.6	0.2-0.3
DN65	G2 1/2 "	61	90.5	90	0-1.0	0.2-0.6	0-1.6	0.2-0.6
				125	0-1.6	0.2-0.4	0-1.6	0.2-0.4
DN80	G3 "	80	135.1	125	0-1.6	0.2-0.7	0-1.6	0.2-0.7

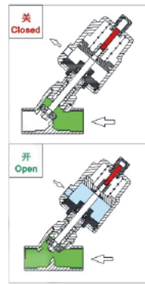

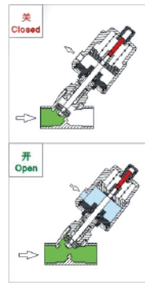

Single Acting,Normally Closed					(NC)-Enter Above Seat Single for condensable media,such as air,steam as air,steam;and low pressure liquid media.		(NC)-Enter Below Seat(No Water-hammer) Flow come from belou seat,avoid water hammer,suitable for higher△P.	
size	Thread end	Orifice(mm)	Kv(m3/h)	Actuator(mm)	△P(MPa)	Control pressure(MPa)	△P(MPa)	Control pressure(MPa)
DN10	G3/8 "	13	5.2	40	0-1.1	0.3	0-1.6	⩾0.3
				50	0-1.4	0.45	0-1.6	⩾0.3
DN15	G1/2 "	13	6.3	40	0-1.1	0.3	0-1.6	⩾0.3
				50	0-1.4	0.45	0-1.6	⩾0.3
DN20	G3/4 "	18	11.5	50	0-1.4	0.45	0-1.6	⩾0.3
DN25	G1 "	24	20.6	50	0-0.75	0.45	0-1.3	0.3-0.6
				63	0-1.4	0.5	0-1.6	0.3-0.4
				90	0-1.4	0.35	0-1.6	0.2-0.3
DN32	G1 1/4 "	31	30.3	63	0-0.6	0.5	0-1.6	0.3-0.6
				90	0-1.6	0.6	0-1.6	0.2-0.4
DN40	G1 1/2 "	35	42.3	63	0-0.5	0.5	0-1.6	0.3-0.7
				90	0-1.6	0.6	0-1.6	0.2-0.5
DN50	G2 "	45	60.7	63	0-0.35	0.5	0-0.8	0.3-0.75
				90	0-1.3	0.6	0-1.6	0.2-0.6
				125	0-1.6	0.6	0-1.6	0.2-0.4
DN65	G2 1/2 "	61	90.5	90	0-0.8	0.6	0-1.1	0.2-0.7
				125	0-1.0	0.6	0-1.6	0.2-0.55
DN80	G3 "	80	135.1	125	0-0.6	0.6	0-1.6	0.2-0.65
DN100	G4 "	90	158.4	125	0-0.25	0.6	0-1.2	0.4-0.5

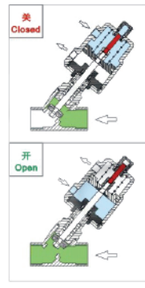

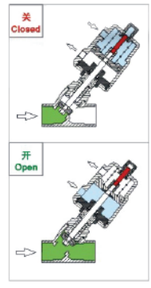

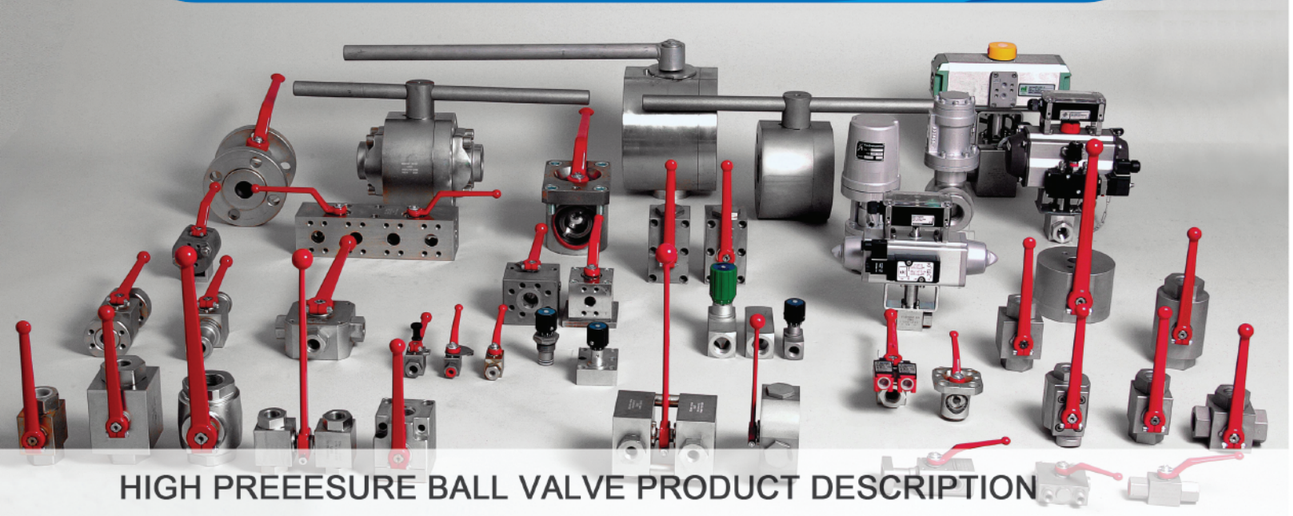

HIGH PREEESURE BALL VALVE PRODUCT DESCRIPTION

※Maximum pressure: 20000PSI
※Connection standard:DNIS0228、ANSIB1.20.1、DIN2353L、DIN2353S、SAEJ514
※Seal material: NBR、FPM、POM

2/2 WAY HIGH PREEESURE BALL VALVE (SCREWED END)

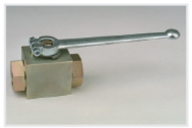

BKH/BKHP420
PN25-50 MPa
DN4-25/40
（carbon steel/stainless steel）

BKH
PN25-50 MPa
DN4-25/40
（carbon steel）

MKHP420/MKH
PN31.5-42 MPa
DN32-50
（carbon steel/ stainless steel）

2/2 WAY HIGH PREEESURE BALL VALVE (WELD END)

BKH-AS
PN16 MPa
DN10-25/40
（carbon steel/ stainless steel）

MKHP-AS / MKH-AS
PN16 MPa
DN32-50/65
（carbon steel/ stainless steel）

2/2 WAY HIGH PREEESURE BALL VALVE (SAE FLANGED END)

MKHP-SAE / MKH-SAE
PN21-42 MPa
DN32-50/65
（carbon steel/stainless steel）

MKHP-SAEFS / MKH-SAEFS
PN21-42 MPa
DN32-50
（carbon steel/stainless steel）

KH-SAE
Metric thread
PN21/42 MPa
DN15-80 (carbon steel)

3/2 WAY HIGH PREEESURE BALL VALVE

BK3
PN31.5-50 MPa
DN4-50
（carbon steel）

BK3K-SAE
PN42 MPa
DN13-50
（carbon steel）

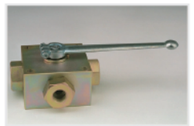

3KH
PN25-50 MPa
DN4-25/40
（carbon steel/stainless steel）

MODEL NO : GKV-134D / 3PC Cryogenic valve---threaded, butt weld, socket weld / 3PC DIRECT MOUNT BALL VALVE

1/4"-2"2000 PSI、
2-1/2"-4"1000PSI

- FACE TO FACE COMPLIES WITH DIN3202-M3 S13
- EACH INTGRATED ISO-5211 MOUNTING PAD
- SQUARE STEM CAN BE WITH DIRECT MOUNT WITHOUT BRACKET/ADAPTOR
- STEM IS WITH BLOW-OUT PROOF DESIGN AS WELL AS ANTI-STATIC DEVICE
- VITON O-RING ON STEM GIVES EXTRA SUPPORT AND ASSURANCE OF TIGHTNESS.
- STEM SEAL IS WITH 45 ANGLE AGAINST STEM,WHICH INCREASES TIGHTING EFFECT.
- EXCEPT ACTUATING SERVICE,HANDLE LEVER IS AVAILABLE FOR MANUAL OPEATION.

- BODY WORKING PRESSURE:2000 PSI
- SIZE:1/4"-2" (DE8-DN50)
- TEST PRESSURE
  SEAT(AIR) : 80PSI
  SHELL(HYDROSTATIC) : 3000PSI
- BODY WORKING PRESSURE : 1000 PSI
- SIZE : 2-1/2"-4" (DN65-DN100)
- TEST PRESSURE
  SEAT(AIR) : 80PSI
  SHELL(HYDROSTATIC) : 1500PSI

MODEL NO : GKV-225D / 2PC Cryogenic valve---Flange / 2PC BALL VALVE

1/2"-4"150LB、、DN15-DN50
PN10/40、DN65-DN100 PN10/16

- BLOW-OUT PROOF STEM.
- BUILT-IN ISO 5211 MOUNTING PAD FOR EASY AUTOMATION.
- ANTI-STATIC DEVICES FOR BALL-STEM-BODY.
- SEMI-ENCAPSULATED BALL SEATS FOR COLD FLOW RESISTANCE.
- BODY WORKING PRESSURE : 150LB
- SIZE : 1/2"-4"
- BODY WORKING PRESSURE : PN10/40
- SIZE : DN15-DN50
- BODY WORKING PRESSURE : PN10/16
- SIZE : DN65-DN100

- WIDE RANGE OF SEAT MATERIAL SELECTION . (SEE CATALOG BV SEAT CATALOG)
- HEAVY DUTY BODY & END CAP CONSTRUCTION WITH TRACEABLE HEAT NUMBER.
- PRESSURE BALANCE HOLE IN BALL SLOT.
- PRESSURE SELF RELIEF SEAT TO PREVENT PRESSURE BUILT UP
- VITON O-RING ON STEM GIVES EXTRA SUPPORT AND ASSURANCE OF TIGHTNESS.

MODEL NO : GKV-32T/B 3PC HIGH PURITY CLEAN BALL VALVE

1/2"–4" 1000PSI
3PC High Purity Clean Ball Valve-TUBE、SCH5、SCH10

1/2"–4" 1000PSI
3PC High Purity Clean Ball Valve-T-CLAMP

- BLOW–OUT PROOF STEM.
- BUILT–IN ISO5211 MOUNTING PAD FOR EASY AUTOMATION
- STRALGHT TRUE PORT FOR UNINTERRUPTED FLOW MEDIA THRU THE VALVE
- FULL PORT FOR TUBING BUTT–WELD
- BOSSES FOR PURGE CONNECTIONS ARE BUILT INTO BODY AND CAP FOR SIP/CIP OPERATIONS
- ALL WETTED PARTS ARE POLISHED TO 180 GRIT RMS 0.51 TO 0.64 MICRON
- SWING–OUT 3PC DESIGN FOR EASY FIELD MAINTENANCW.
- ALL EXTEND WELD ENDS IN SS316L MATERIAL ALLOWS ORBITAL WELDING IN PLACE.
- HIGH PURITY CLEANING OIL FREE AND PACKING.
- VITON O–RING ON STEM GIVES EXTRA SUPPORT AND ASSURANCE OF TIGHTNESS.
- BODY WORKING PRESSURE : 1000 PSI (PN64)
- SIZE : 1/2"–4" (DN15–DN100)
- TEST PRESSURE
  SEAT(AIR) : 80PSI
  SHELL(HYDROSTATIC) : 1500PSI

MODEL NO : GKV-33W/T/B/L 3PC BALL VALVE

1/4"–4 1000PSI
3PC Direct Mount Ball Valve-threaded, butt weld, socket weld

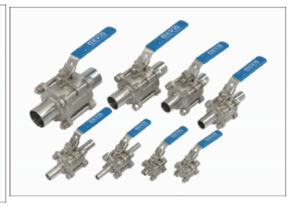

1/4"–4 1000PSI
3PC High Purity Clean Ball Valve-TUBE、SCH5、SCH10

1/4"–4" 1000PSI
3PC High Purity Clean Ball Valve-T-CLAMP

1/4"–1"RP 1000PSI
3PC Metric Inch LOK

- BLOW–OUT PROOF STEM
- STAINLESS STEEL BALL AND STEM ARE STANDARD
- PRECISION INVESTMENT CAST BODY AND CAPS
- EASY INSTALLATION WITH WIDE SELECTION OF END FITTINGS
- THREE–PIECE SWING–OUT DESIGN ALLOWS IN–LINE MAINTENANCE
- FULL PORT ORIFICE MINIMIZES PRESSURE DROP ACROSS THE PIPELINE
- HELIUM LEAKAGE TEST-INTERNAL<10-5, EXTERNAL<10-6.
- SELF–ADJUSTING FLOATING BALL ENABLES TIGHT INTERNAL SEAL
- BODY WORKING PRESSURE : 1000 PSI (PN64)
- SIZE : 1/4"–4" (DN 8–DN100)
  TEST PRESSURE
  SEAT(AIR) : 80PSI
  SHELL(HYDROSTATIC) : 1500PSI
- TEST HAVE PASSED ON METAL INDUSTRY RESEARCH AND DEVELOPMENT CENTER“HELIUM LEAKAGE TEST”.

MODEL NO : GKV-36W / 3PC DIRECT MOUNT Ball Valve-TUBE、SCH5、SCH10

1/2"–2" 2000PSI

- FACE TO FACE COMPLIES WITH DIN3202–M3 S13
- EACH INTGRATED ISO–5211 MOUNTING PAD
- SQUARE STEM CAN BE WITH DIRECT MOUNT WITHOUT BRACKET/ADAPTOR
- STEM IS WITH BLOW–OUT PROOF DESIGN AS WELL AS ANTI–STATIC DEVICE
- VITON O–RING ON STEM GIVES EXTRA SUPPORT AND ASSURANCE OF TIGHTNESS.
- STEM SEAL IS WITH 45 ANGLE AGAINST STEM,WHICH INCREASES TIGHTING EFFECT .
- EXCEPT ACTUATING SERVICE , HANDLE LEVER IS AVAILABLE FOR MANUAL OPERATION .
- BODY WORKING PRESSURE : 2000 PSI
- SIZE : 1/2"–2" (DN15–DN50)
- BODY WORKING PRESSURE : 2000 PSI
- TEST PRESSURE
  SEAT(AIR) : 80PSI
  SHELL(HYDROSTATIC) : 3000PSI
- I SIZE : 1/2"–4" (DN65–DN100)
- BODY WORKING PRESSURE : 1000 PSI
- TEST PRESSURE
  SEAT(AIR) : 80PSI
  SHELL(HYDROSTATIC) : 1500PSI
- SIZE : 5"- 6" (DN125–DN150)
- BODY WORKING PRESSURE : 720 PSI
- TEST PRESSURE
  SEAT(AIR) : 80PSI
  SHELL(HYDROSTATIC) : 1100PSI

Valve components processing

Germany DMU 60T MONO BLOCK Five-axis processor
Germany 835V MONO BLOCK Four-axis processor
Germany 635V MONO BLOCK Three-axis processor
CNC lathes processor
2.5D Image testing machine